Chessboard • Bead-Front Bookcase • Card Case • Candle Centerpiece

Woodsmith®

Vol. 22 / No. 132

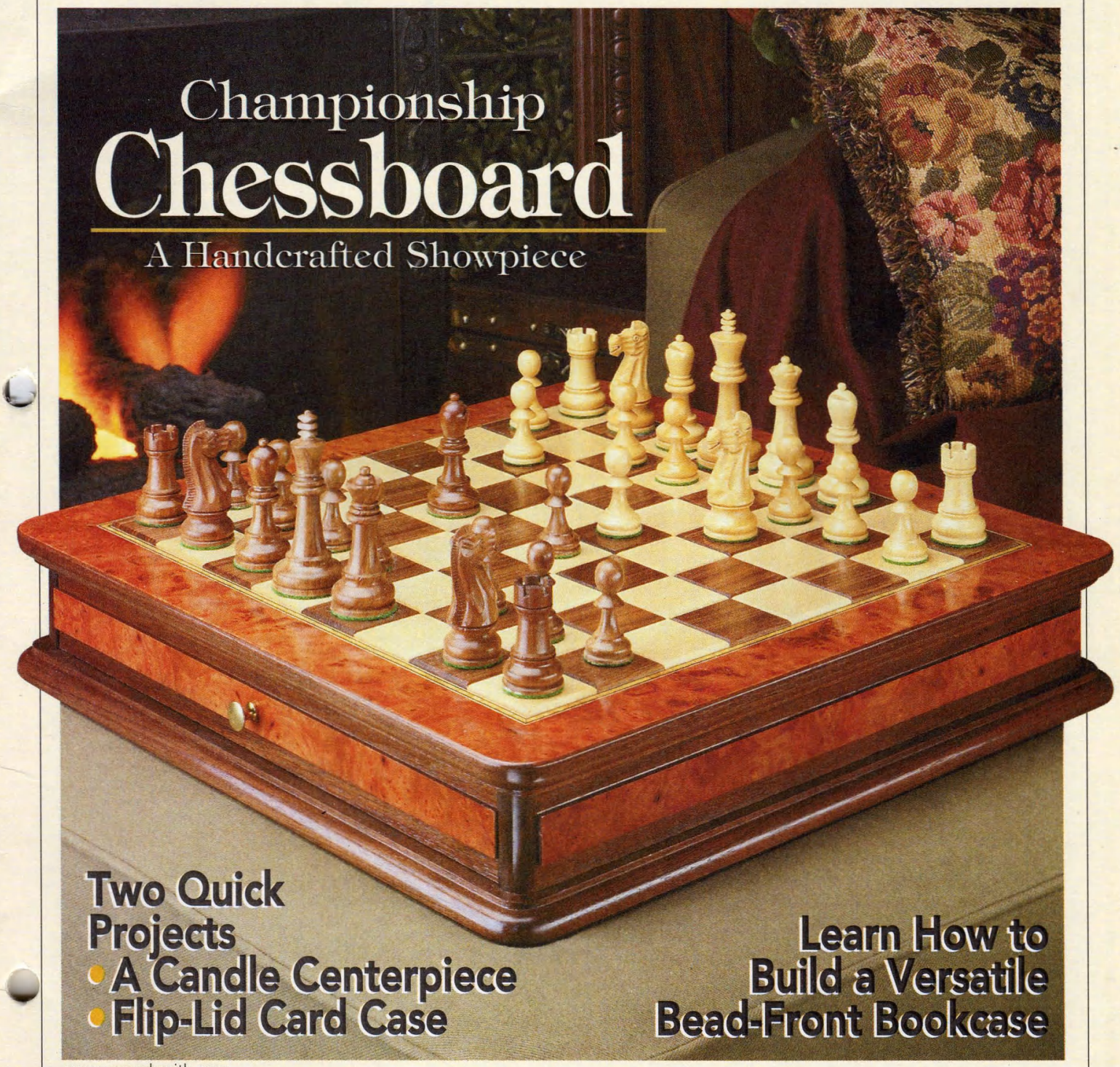

Championship Chessboard

A Handcrafted Showpiece

Two Quick Projects
- A Candle Centerpiece
- Flip-Lid Card Case

Learn How to Build a Versatile Bead-Front Bookcase

www.woodsmith.com

Woodsmith

No. 132 December, 2000

Publisher Donald B. Peschke
Editor Terry J. Strohman
Associate Editors Jon Garbison, Vincent Ancona
Art Director Todd Lambirth
Senior Illustrators David Kreyling, Dirk Ver Steeg, Harlan V. Clark
Graphic Intern Jonathan Eike

CREATIVE RESOURCES
Creative Director: Ted Kralicek • *Project Developer:* Ken Munkel • *Sr. Project Designer:* Kent Welsh • *Shop Manager:* Steve Curtis • *Shop Craftsman:* Steve Johnson • *Senior Photographer:* Crayola England

SPECIAL PUBLICATIONS
Executive Editor: Douglas L. Hicks • *Senior Graphic Designer:* Chris Glowacki • *Assistant Editors:* Craig Ruegsegger, Joel A. Hess • *Graphic Designers:* Vu Nguyen, April Walker Janning, Stacey L.Krull • *Graphic Intern:* Heather Boots

CIRCULATION
Subscriber Services Director: Sandy Baum • *Promotion Mgr.:* Rick Junkins • *Renewal Mgr.:* Paige Rogers • *Billing & Collections Mgr.:* Rebecca Cunningham • *Circ. Marketing Analyst:* Kris Schlemmer • *Assoc. Circ. Marketing Analyst:* Paula M. DeMatteis • *Asst. Subs. Mgr.:* Joy Krause • *Sr. Graphic Designers:* Mark Hayes, Robin Dowdell

CORPORATE SERVICES
Director of Finance: Mary R. Scheve • *Controller:* Robin Hutchinson • *Sr. Account.:* Laura Thomas • *Accts. Payable:* Mary J. Schultz • *Accts. Receivable:* Margo Petrus • *Production Dir.:* George Chmielarz • *Electronic Publishing Director:* Douglas M. Lidster • *Network Administrator:* Cris Schwanebeck • *Pre-press Image Specs.:* Troy A. Clark, Minniette Johnson • *Prod. Coordinator:* Noelle Carroll • *New Media Manager:* Gordon C. Gaippe • *Web Site Art Director:* Gene Pedersen • *Technology Analyst:* Carol Schoeppler • *Web Content Managers:* Terry Walker, David Briggs • *H.R. Assistant:* Kirsten Koele • *Facilities Mgr.:* Julia Fish • *Admin. Assistant:* Sherri Ribbey • *Receptionist:* Jeanne Johnson • *Mail Room/Delivery:* Lou Webber

WOODSMITH MAIL ORDER
Operations Dir.: Bob Baker • *Customer Service Mgr.:* Jennie Enos • *Warehouse Supr.:* Nancy Johnson • *Buyer:* Linda Jones • *Tech. Service Rep:* Johnny Audette • *Admin. Assist.:* Nancy Downey • *Cust. Serv. Reps.:* Tammy Truckenbrod, Anna Cox, Deborah Rich, April Revell, Valerie Riley, Linda Stepp • *Warehouse:* Sylvia Carey, Dan Spidle, Sheryl Knox, Al Voigt

WOODSMITH STORE
Manager: Dave Larson • *Sales Staff:* Wendell Stone, Jim Barnett, Kathy Smith, Larry Morrison, Harold Cashman, Tim Thelen, Mark Johnson • *Office Mgr.:* Vicki Edwards

Woodsmith® (ISSN 0164-4114) is published bimonthly (Feb., Apr., June, Aug., Oct., Dec.) by August Home Publishing Company, 2200 Grand, Des Moines, IA 50312.

Woodsmith® is a registered trademark of August Home Publishing. **Copyright©** 2000 August Home Publishing Company. All rights reserved.

Subscriptions: Single copy: $4.95. One year subscription (6 issues), $24.95. (Canada/International add $10 per year, U.S. funds.)
Periodicals Postage Paid at Des Moines, IA and at additional offices. USPS/Perry-Judd's Heartland Division Automatable Poly.
Postmaster: Send change of address to *Woodsmith*, Box 37112, Boone, IA 50037-2112.
Subscription Questions? Write to *Woodsmith*, P.O. Box 842, Des Moines IA 50304-9961 or call 1-800-333-5075, 8:00 am to 5:00 pm, Central Time, weekdays. Or send an e-mail to: orders@woodsmith.com
E-Mail: woodsmith@woodsmith.com
World Wide Web: http://www.woodsmith.com

Printed in U.S.A.

EDITOR'S COLUMN

SAWDUST

A while back, we put together a list of projects that we were considering for this special holiday "gift" issue. Several projects grabbed my attention right away. They are quick to build (always a plus as the holidays approach). But more importantly, each one offers an interesting woodworking challenge along with some unique design features.

CENTERPIECE. The candle holder centerpiece that begins on page 26 is a good example. It's made up of nine small blocks that sit on a wood base. Each block is drilled to hold a tealight candle. By cutting the blocks to different lengths, you can vary the height and create different looks for the centerpiece. It's a perfect gift that can be built in an evening.

FLIP-LID CARD CASE. Another small project that makes a great gift and can be completed quickly is the card case shown on page 32. This case features an unusual flip-lid design, and it's decked out with fancy veneer.

CHESSBOARD. Speaking of veneer, be sure to check out the chessboard on page 6. This heirloom project has a veneered frame that surrounds a raised playing field made up of contrasting maple and walnut tiles. Be sure to take a look at our simple solution for cutting the tiles accurately.

BEAD-FRONT BOOKCASE. Finally, there's a small bookcase that features frame and panel construction, beaded edges, and two drawers. I know it sounds like a long involved project. But don't let the details fool you. With its simple, straightforward design, you can build the project in a weekend or two — just in time for the holidays.

Terry

P.S. We're looking for a woodworking editor to join our staff. See Sources on page 35 for more information.

STATEMENT OF OWNERSHIP, MANAGEMENT AND CIRCULATION
(Required by 39 U.S.C. 3685)

Publication Title: Woodsmith. 2. Publication No.: 0164—4114. 3. Filing Date: September 18, 2000. 4. Issue Frequency: Bimonthly. 5. No. of issues published annually: 6 (six). 6. Annual subscription price: $21.94. 7. Complete mailing address of known office of publication: 2200 Grand Avenue, Des Moines, (Polk County), Iowa 50312-5306. 8. Complete mailing address of the headquarters or general business office of the publisher: 2200 Grand Avenue, Des Moines, Iowa 50312-5306. 9. Full names and complete mailing address of publisher, editor, and managing editor: Publisher: Donald B. Peschke, 2200 Grand Avenue, Des Moines, Iowa 50312; Editor: Terry J. Strohman, 2200 Grand Avenue, Des Moines, Iowa 50312. 10. Owner: August Home Publishing Co., 2200 Grand Avenue, Des Moines, Iowa 50312; Donald B. Peschke, 2200 Grand Avenue, Des Moines, Iowa 50312. 11. Known bondholders, mortgagees, and other security holders owning 1 percent or more of total amount of bonds, mortgages or other securities: None. 12. (Does not apply.) 13. Publication Title: Woodsmith. 14. Issue Date for Circulation Data below: July/August 2000. 15. Extent and nature of circulation:

	Average no. copies each issue during preceding 12 months	Actual no. copies of single issue published nearest to filing date
A. Total number of copies (net press run)	325,172	326,547
B. Paid and/or requested circulation:		
1. Paid/Requested outside-county mail subscriptions stated on Form 3541	278,532	274,099
2. Paid in-county subscriptions	0	0
3. Sales through dealers and carriers, street vendors and counter sales, and other non-USPS paid distribution	19,418	19,446
4. Other classes mailed through the USPS	0	0
C. Total paid and/or requested circulation	297,950	293,545
D. Free distribution by mail (samples, complimentary, and other free copies)		
1. Outside-county as stated on Form 3541	1,442	1,613
2. In-county as stated on Form 3541	0	0
3. Other classes mailed through the USPS	0	0
E. Free distribution outside the mail (carriers or other means)	0	0
F. Total free distribution	1,442	1,613
G. Total distribution	299,392	295,158
H. Copies not distributed	25,780	31,389
I. Total	325,172	326,547
Percentage paid and/or requested circulation	99.52%	99.45%

16. Publication of statement of ownership will be printed in the December 2000 issue of this publication.
17. I certify that all the information furnished on this form is true and complete. (signed) Terry J. Strohman, Editor

A LOOK INSIDE

CONTENTS

Features

Chessboard 6

Hardwood squares and a veneered frame make for an elegant project that's sure to become a family heirloom. And whether chess or checkers is your game, the divided drawer under the board holds everything you'll need for your next match.

Veneering Basics 14

Want to "dress up" a woodworking project? Try veneering. We'll walk you through the basics (and more) step-by-step.

Bead-Front Bookcase 20

We'll show you how to build this small bookcase in a few days. The joinery is simple. The drawers are straightforward. And all the bead molding is made with a single router bit.

Candle Centerpiece 26

If you would like a unique gift to build this holiday season, take a look at this centerpiece. It's one project you won't be burning the midnight oil to complete.

Top Ten Router Tips 28

Fast, accurate setups, trimming plywood edging quickly, routing without chipout — just a few of the shop-tested tips that will come in handy when building your next project.

Flip-Lid Card Case 32

Any way you look at it, this flip-lid case is a good deal. It features veneered faces, a shop-made hinge, and a magnetic catch. Plus, you'll be able to build it in no time.

Departments

Tips & Techniques 4
Shop Notes 18
Sources 35

Chessboard *page 6*

Bead-Front Bookcase *page 20*

Candle Centerpiece *page 26*

Flip-Lid Card Case *page 32*

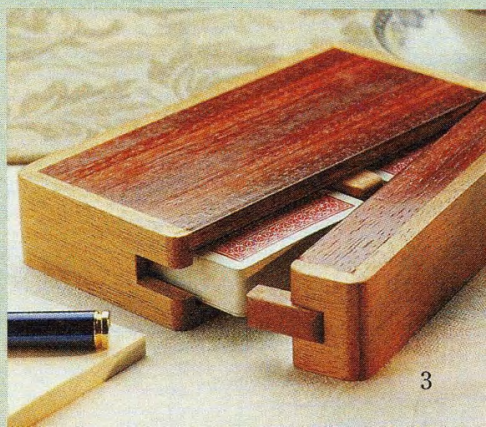

TIPS & TECHNIQUES

Featherboards for Coves

I thought your article on cove cutting that appeared in issue No. 129 of *Woodsmith* was well done. Like you, I also use two fences when setting up to cut a cove on the table saw. But I added a modification to my fences to make them safer, as well as improve the quality of the finished cove molding.

I simply mounted a featherboard to each fence to hold the stock down firmly against the saw table, see photo.

I started by making the fences. These are just two pieces of ¾" plywood, about 5" wide. (I used a couple of scraps left over from a previous project.)

Making the fences this wide gives you plenty of room for clamping them down to the table saw. It also provides a wider base of support, making the featherboards more stable.

Next, I made a couple of mounting blocks for the featherboards. These are just two pieces of "two-by" stock, about 8" long. Holes are drilled through each mounting block to match the slots in the featherboards. Then the blocks are simply screwed to the fences flush with the edges, as shown below in Fig. 1.

I found it convenient to use plastic featherboards. They simply mount to the block with machine screws and threaded knobs.

With the featherboards in place, the depth of the cove is more consistent, and I can keep my hands further away from the blade (Fig. 2).

Donald Peck
Warren, New Jersey

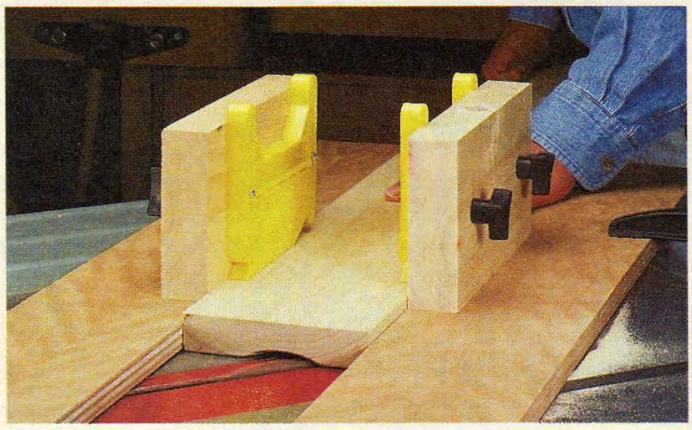

FREE
Online Tips

If you'd like even more woodworking tips, the solution is simple. Just visit us at our web site and sign up to receive a free tip via email every week.

www.woodsmith.com

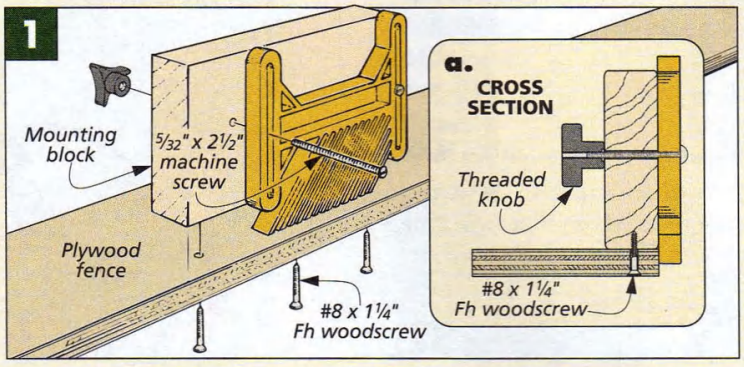

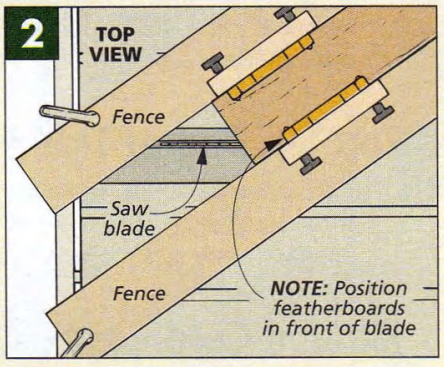

Rolling a Tenon

Some time ago, I was making a project that called for a round tenon on the end of a square piece of stock.

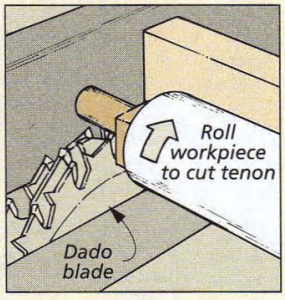

▲ *A piece of PVC pipe can be used with a table saw to create a round tenon on square or rectangular stock.*

In order to create this tenon, I came up with this simple method.

I simply slipped the workpiece into a piece of PVC pipe. (A cardboard tube would also work.) Then I rolled the workpiece while making repeat passes over a dado blade, nibbling away the waste until I had a round tenon.

Henry Roelofs
Torrington, Connecticut

Installing Hanger Bolts

I use hanger bolts for a lot of my woodworking projects. (These "bolts" have wood threads on one end and machine screw threads on the other.) The trick is inserting them into the workpiece without damaging the machine threads.

I just place an acorn nut onto the end of the hanger bolt. This allows me to use a socket wrench to install the hanger bolt. Once it's screwed in place, I simply remove the nut.

Henry Ellis
Melbourne, Florida

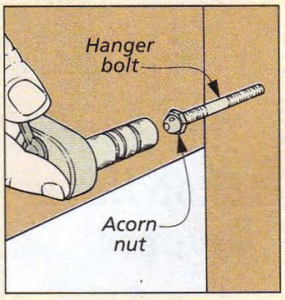

Flush Trim Jig

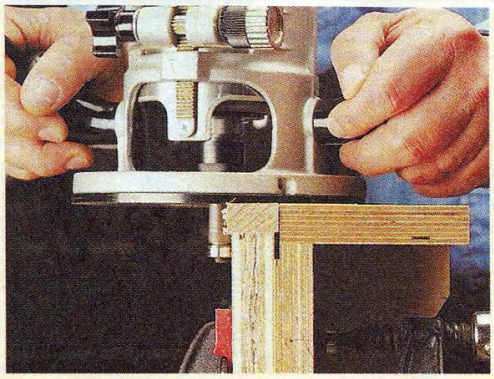

Recently I was building a bookcase with several shelves. The shelves were all made out of plywood. But to conceal the front edge of the plywood, I glued a hardwood strip onto each shelf.

The problem came when I tried to trim the edging flush with the shelf using my router and a flush trim bit. Because each shelf was only 3/4" wide, there wasn't a wide enough surface for my router to ride on. So I came up with a quick jig.

This jig is really just a narrow "shelf" that clamps to the side of your workpiece and provides a wide, flat support surface for the router base.

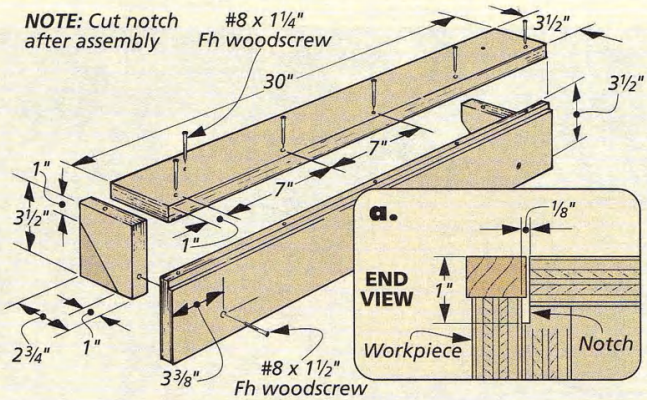

To make the jig, I glued and screwed two pieces of 3/4" plywood together to create an "L" shape, as you can see in the drawing at left. A small support bracket is then screwed to each end.

Before using the jig, a shallow notch is cut in the front edge to create clearance for the edging that will be trimmed. This notch can be cut on a table saw. (Just make sure you don't cut through the screws.)

To use the jig, just clamp it to the side of the workpiece, flush with the front of the edging, see photo above.

Jerry Pasley
Olive Branch, Mississippi

Ripping a Straight Edge

I often use a lot of small pieces of lumber cut from short logs or branches that I obtain from the woods near my house.

After sawing the log up and drying the boards, I need to rip a straight edge on one side. Since I don't have a table saw, I've come up with a handy way of ripping a straight edge using my band saw.

I first make a runner out of hardwood to fit in the miter gauge slot of my band saw. It needs to be the same width as the miter gauge slot but not as deep.

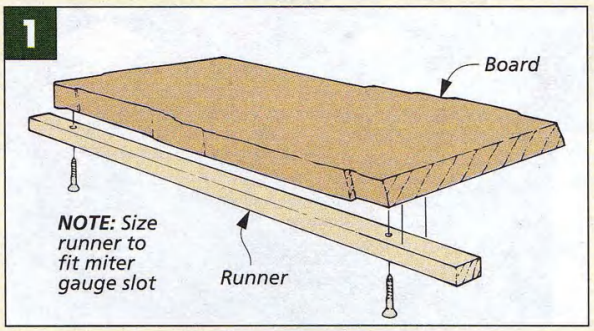

Then I screw the runner to the bottom side of the board I want to trim, just like you see in Fig. 1. (If you don't want to drive screws into the board, you can also attach the runner with double-sided tape.)

The runner guides the board along a straight path as I push it through the saw (Fig. 2). This gives me a straight edge.

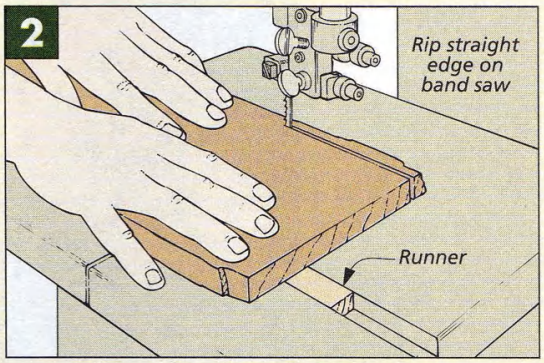

James Reszler
Fort Wayne, Indiana

SUBMIT YOUR TIPS

If you have an original shop tip, we would like to hear from you and consider publishing your tip in one or more of our publications. Just write down your tip and mail it to: *Woodsmith,* Tips and Techniques, 2200 Grand Avenue, Des Moines, Iowa 50312. Please include your name, address, and daytime phone number in case we have any questions. If you would like, FAX it to us at 515-282-6741 or send us an email message at: woodsmith@woodsmith.com. We will pay up to $200 if we publish your tip.

Saw Blade Protector

Here's an easy way to protect the teeth of my handsaws from accidental damage. (It also works well to prevent any scrapes or cuts while handling a saw.)

I simply cut a length of foam pipe insulation (available at hardware stores or home centers) and place the insulation over the edge of the saw blade. Pipe insulation is inexpensive and lasts a long time.

Harvey Wise
Arleta, California

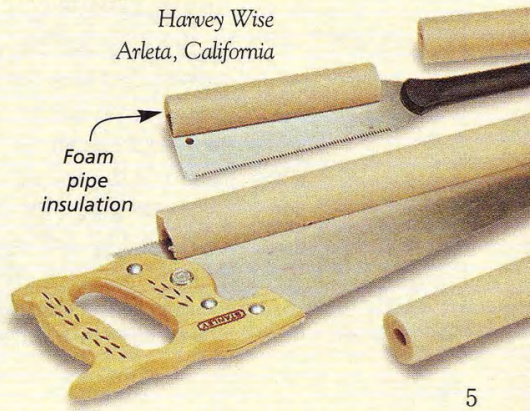

CHESSBOARD

From figured veneer and inlay to a board made up of individual squares, we've got the winning strategies to build this challenging project.

Whether you've been woodworking for many years or you're just starting out, it's hard to look at a project like this and *not* feel a little amazed by all the fine details. Like the richly-veneered top and side panels, the inlay border around the top, and even the individually chamfered squares that make up the top. But don't let all these eye-catching elements overwhelm you or make you reluctant to try your hand at building this project.

The truth is that even though this appears to be a challenging and complex piece, we've come up with ways to deal with each step of the construction. Take the veneered, raised panels on the sides and drawer of the case, for example. You might think it would be difficult to fit the veneer to the panel. But the trick is to veneer the piece first and then cut the panel afterward.

DRAWER. One feature that I haven't really mentioned yet is the drawer that fits into the case. It can be pulled out from either side of the case so both players can have easy access to their playing pieces. There's a pair of cleverly installed catches to keep the drawer from sliding out accidentally. Inside the drawer are divided compartments to store the chess pieces safely when they're not in use (see inset photo above). And even though we've called this a chessboard, there are also compartments inside the drawer to hold checkers (for those of us who can't tell a rook from a bishop).

One more thing. The drawer (and case) are designed so that they can be optional. If you want, you can build just the top and have an elegant chess and checkers board that doesn't take up much space. This way, you still get a chance to try your hand at veneering, inlay, and making the chamfered square "tiles" on the top without having to build the entire project.

Construction Details

OVERALL DIMENSIONS:
18¾"W x 18¾"D x 3⅝"H

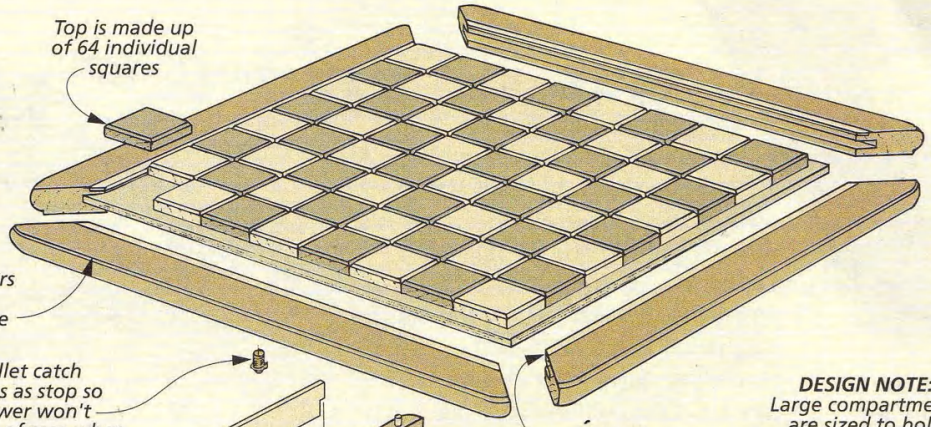

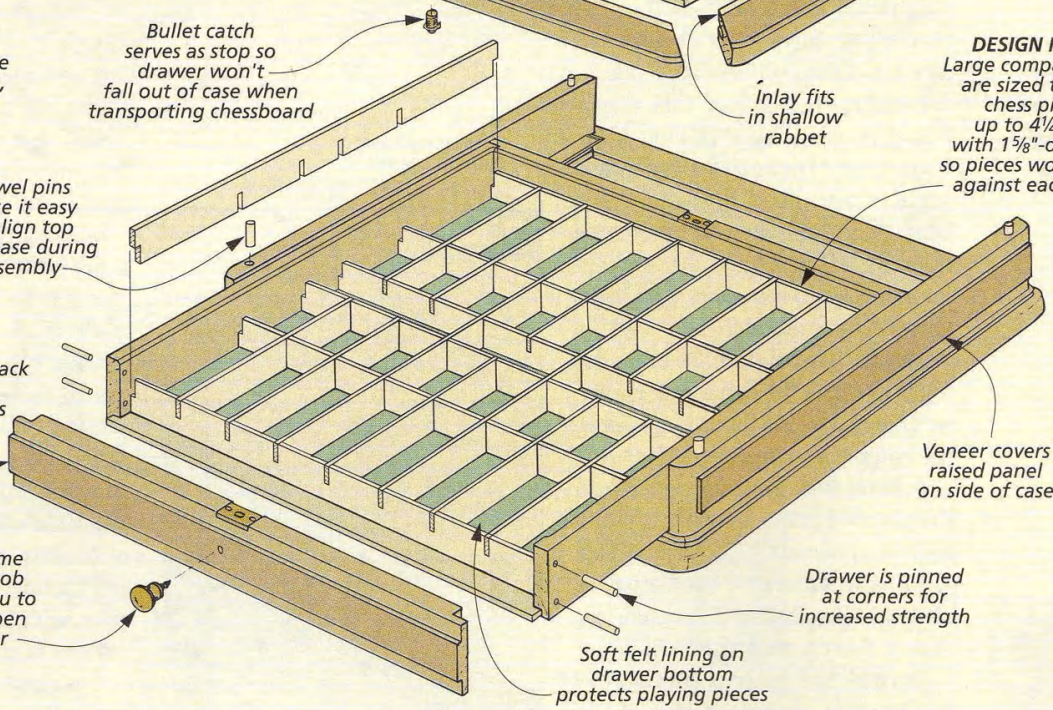

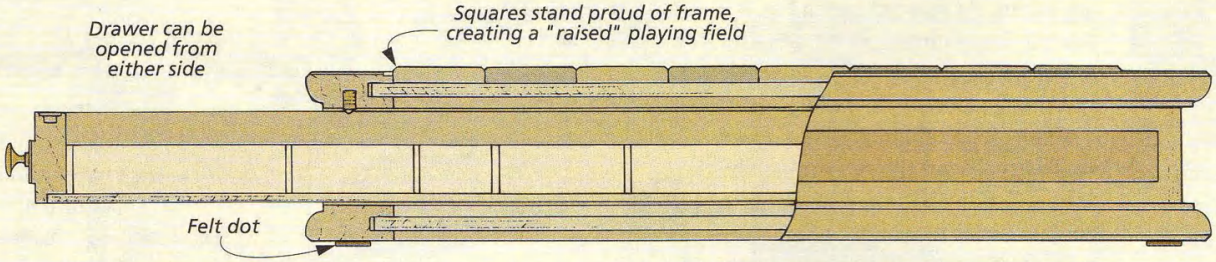

MATERIALS, SUPPLIES, & CUTTING DIAGRAM

A Squares (64)	⅜ x 1⅞ - 1⅞
B Panels (2)	¼ ply. - 15⅞ x 15⅞
C Frame Pieces (8)	¾ x 1⅞ - 18¾
D Case Sides (2)	¾ x 2 - 17½
E Drawer Fr./Bk. (2)	¾ x 1⅞ - 16⅛
F Drawer Sides (2)	½ x 1⅞ - 17
G Drawer Btm. (1)	¼ ply. - 15⅞ x 17
H Drawer Runners (2)	1/16 x ½ - 17
I Frt.-to-Bk. Dividers (9)	⅛ x 1 - 16¼
J Side-to-Side Dividers (6)	⅛ x 1 - 15⅛

*Also Needed: Appr. 3 sq. ft. of Carpathian elm burl veneer and 6 lin. ft. of inlay

- (2) ½" x ½" Brass Knobs w/Studs
- (2) Bullet Catches
- (1) .032"-thick Brass (½" x 6")
- (4) #2 x ¼" Fh Brass Woodscrews
- (1) Felt for Drawer
- (1) Posterboard for Felt
- (4) ¾"-dia. Self-Adhesive Felt Dots

NOTE: *Squares (part A) are made from ½"-thick stock that is planed to ⅜" thick*

Also note that optional dividers (parts I and J) are resawn from ¾"-thick stock

ALSO NEEDED:
24" x 48" sheet of ¼" walnut plywood

¾" x 5½" - 36" Maple (1.4 Bd. Ft.)

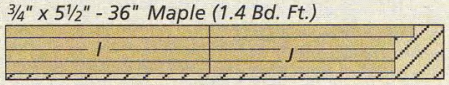

½" x 5½" - 36" Maple (1.4 Sq. Ft.)

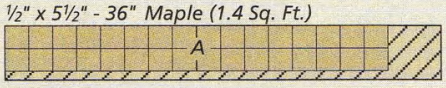

¾" x 5½" - 48" Walnut (Two Boards @ 1.8 Bd. Ft. Each)

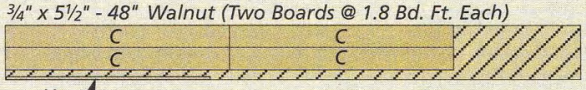

½" x 5½" - 60" Walnut (2.3 Sq. Ft.)

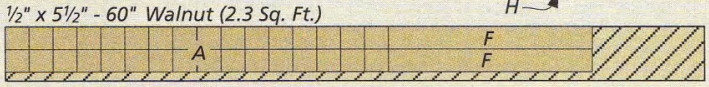

¾" x 5½" - 36" Walnut (1.4 Bd. Ft.)

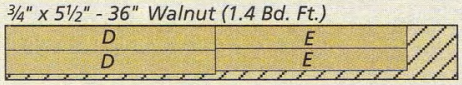

▲ *Alternating maple and walnut squares make up the playing surface of this chessboard.*

Top & Bottom

The one thing that makes this chessboard different than most is the playing field. It's made up of sixty-four individual squares that are raised slightly above the surface of the border. Plus, small edge chamfers set each square apart from its neighbors. Together, these two elements transform a flat playing surface into a three-dimensional one.

Building the top of this chessboard is a lot like installing a tile floor. That's because the individual squares are glued down to a plywood panel, just like you would with floor tiles. Then once the squares are attached to the panel, a frame is constructed around them.

SQUARES. The trick to building the top is to cut all the squares accurately. This makes it a lot easier to keep the rows of squares aligned when it comes time to glue them down to the plywood panel. In order to make all the *squares (A)* the same size (and truly square), I used a jig, as shown in Fig. 2. (For more information on this jig, see page 18.)

Once all the squares are cut, you can rout the chamfers around the top edges. As you can see in Fig. 3, I routed these chamfers on a router table, using a push block to safely hold each piece while routing.

After all the chamfers have been routed, you can dry assemble the squares to determine how large to cut the panel to which the squares will be attached. There's just one thing to mention here. To give the squares some "breathing room" I placed paper spacers between each one. You can see how I used these spacers in Fig. 4.

PANEL. With the squares dry assembled, you can measure for the *panel (B)*. I cut my panel 7/8" larger in both length and width than the dry assembled squares. If you're building the complete chessboard (with the drawer), you'll need to cut a second panel for the bottom.

ASSEMBLY. Assembling the squares is just a matter of clamping the framing square to the panel and gluing the squares down one at a time, like you see in Fig. 4. The field of

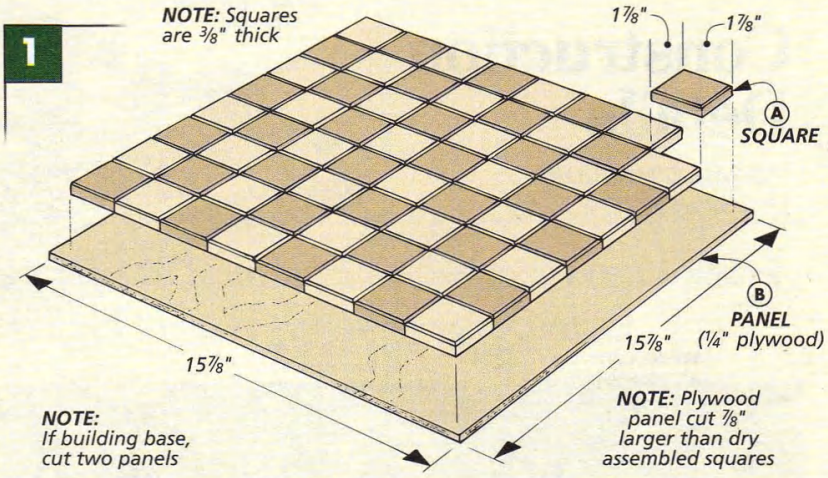

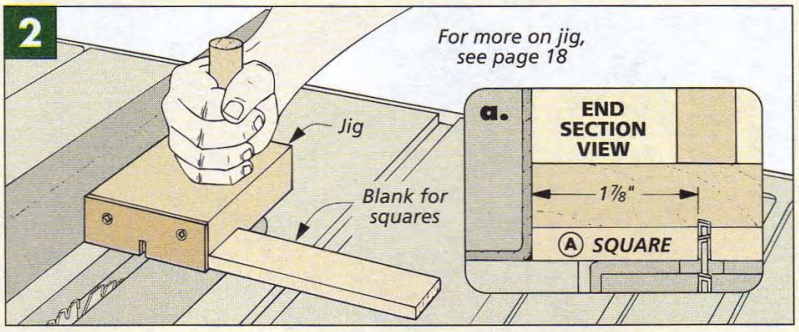

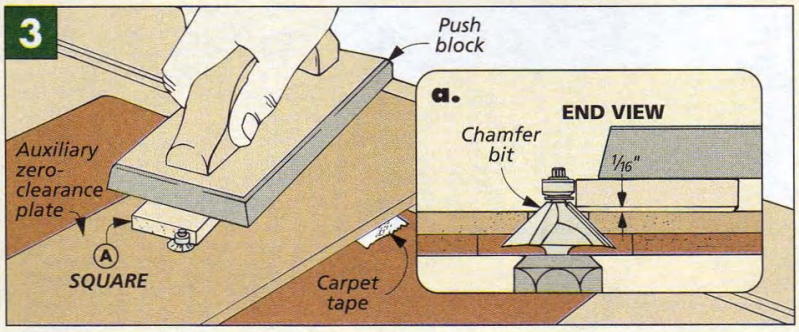

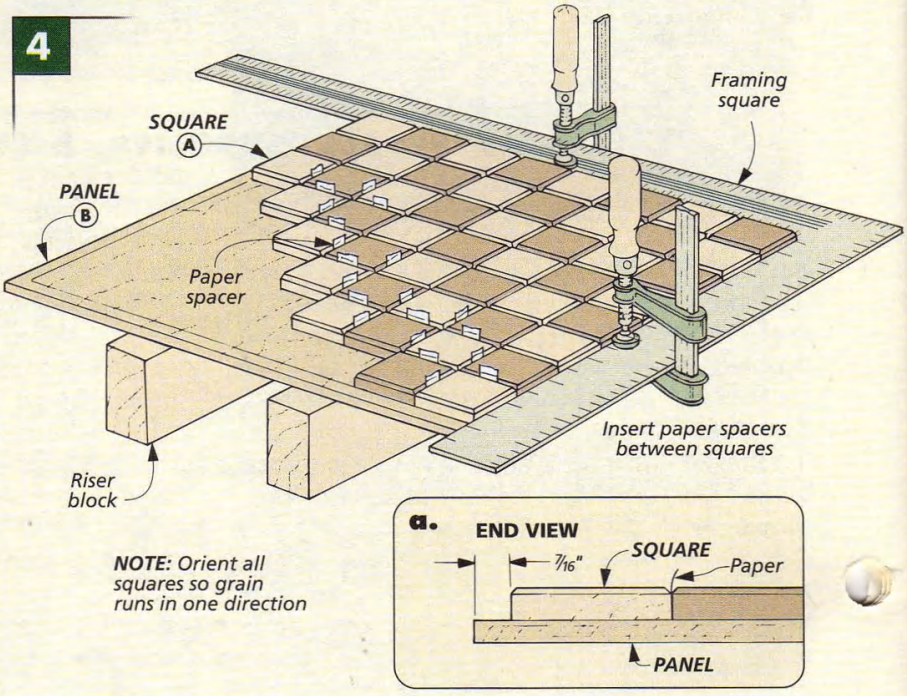

squares should be centered on the panel, 7/16" from the edges (Fig. 4a).

FRAMES. Both the top and bottom panel are held in solid wood frames. These frames are identical except for the fact that the top frame has veneer and inlay strips applied to its surface (Fig. 5). Shop Note: If you're making just the top, you only have to build one frame.

To make the frames, start by ripping the *frame pieces (C)* to width (Fig. 5b). Then the top face of the upper frame pieces can be veneered. (For more on veneering, see the article on page 14.)

After applying the veneer, cut a groove on one edge of each frame piece to hold the panels, as you see in Fig. 6. You'll note in Fig. 6a that this groove is not centered on the thickness of the stock but is slightly offset. This is to ensure the squares will stand 1/8" proud of the frame.

Once the grooves have been cut, the frame pieces can be mitered to length to fit around the panels. Then all you have to do is add the inlay strips to the upper frame pieces. This is just a matter of cutting a shallow rabbet for the inlay strip and gluing it in place (Fig. 7).

After trimming the inlay strips flush with the ends of the frame pieces, you can glue the frames up around the panels. Once this is done, all that's left to do is create the profile on the frames.

FRAME PROFILE. To start with, I used a band saw and some sandpaper to round the corners of each frame as shown in Fig. 5a. Next, a chamfer is routed on the top edge of the upper frame and the bottom edge of the lower frame, just like you see in Fig. 8. You'll have to adjust the height of the router bit for each frame due to the thickness of the squares on the upper frame (Figs. 8a and 8b).

Finally, a roundover is routed on the edge of the each frame, opposite the chamfer, as you can see in Fig. 9. When setting up to rout this roundover, note that there's a 1/8" shoulder between the roundover and the face of the frame (Fig. 9a).

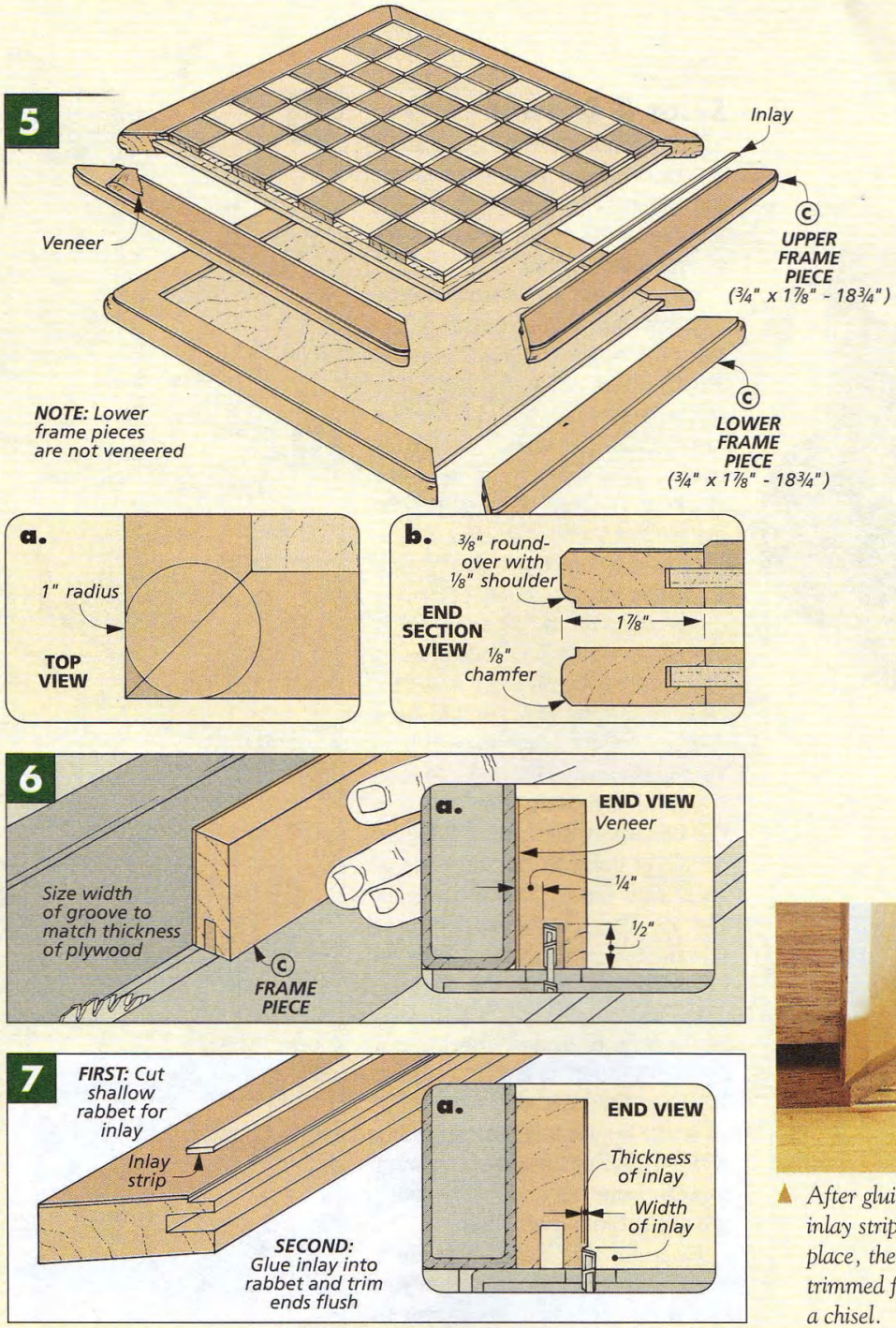

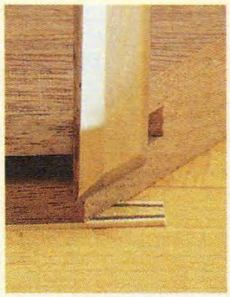

▲ *After gluing the inlay strip in place, the ends are trimmed flush with a chisel.*

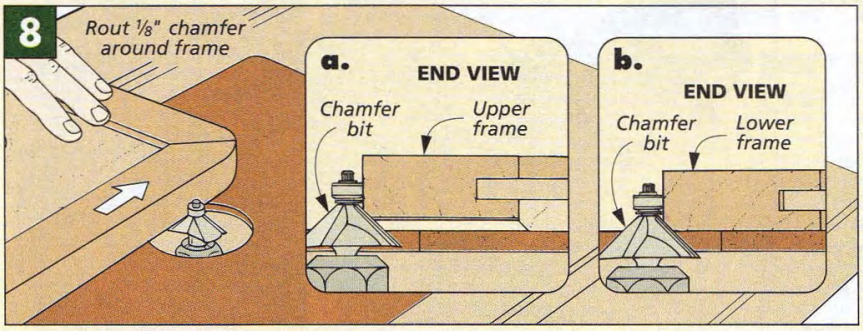

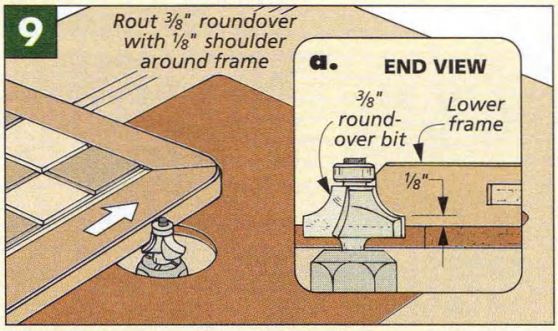

Sides & Drawer

So now you have these two framed panels — one for the top and one for the bottom. The next step is to build the sides and drawer that will be sandwiched between them.

SIDES. The sides of the case feature a raised field that's veneered. But this isn't as difficult as it sounds. The trick is to veneer the whole face of the side first, then to cut the raised field afterward. I started by cutting two pieces of 3/4"-thick stock for the *sides (D)* and veneering both of them (Fig. 10).

A two-step process is used to create the raised field. First, a roundover with a 1/8" shoulder is routed on the ends of each side, as you can see in Figs. 11 and 11a. Next, a straight bit is used to cut a rabbet along the edges of each side, just as is shown in Figs. 12 and 12a.

Before attaching the sides to the bottom of the case, I drilled a couple of holes in the top edge of each side piece, like you see in Fig. 13. These holes are for some dowels that will be used later to help align and attach the top.

The sides are simply glued down to the bottom frame. There are a couple of things to watch for here. First, you want the sides to be parallel so the drawer will slide smoothly without binding. Second, you want to make sure the ends of the sides are aligned with each other.

To make this easier, I made a spacer out of 1/4" hardboard, as you can see in Fig. 14. This spacer is clamped in place to the bottom frame. The sides are set against the spacer, flush with the ends, and then glued and clamped in place. Shop Note: To avoid accidentally gluing the spacer to the bottom frame, you'll want to remove it as soon as the sides are clamped in place.

DRAWER. Because there are many other challenging aspects to this project (veneering, inlay, squares, etc.) I decided to keep the drawer as simple as possible. As you can see in Fig. 15, the sides are joined to the front and back with ordinary rabbet joints. Then a plywood bottom is added afterwards.

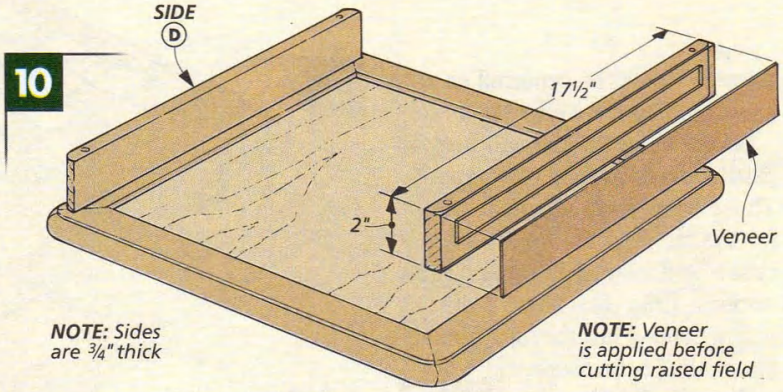

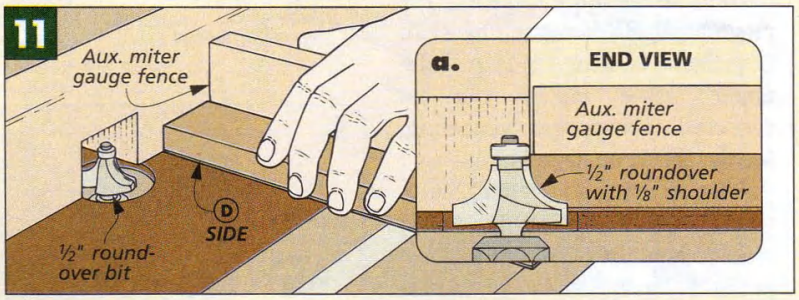

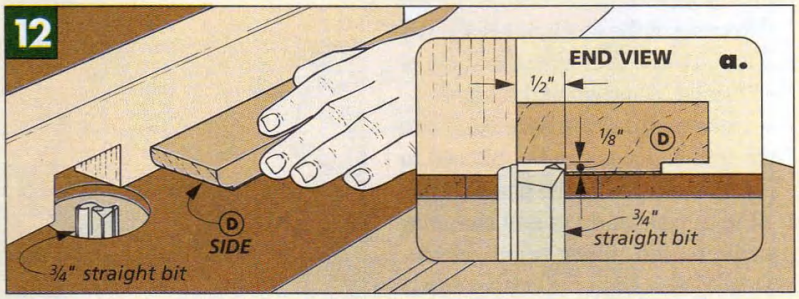

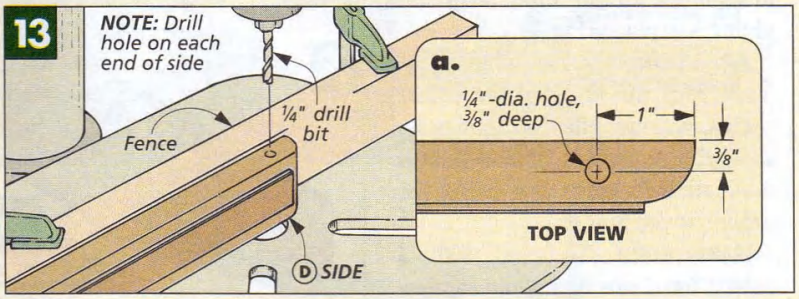

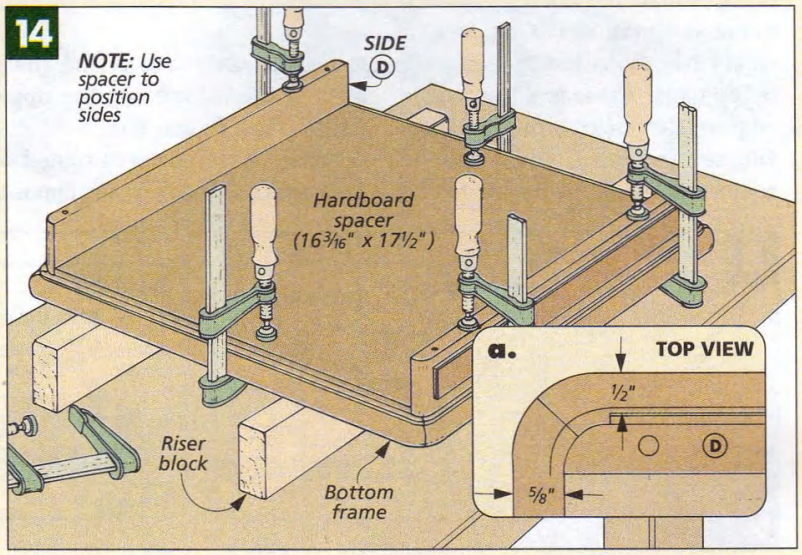

Like the sides of the case, the *drawer front/back (E)* feature veneered raised panels (Fig. 15). So after cutting the front and back to size you can veneer one face of each piece. Creating the raised field is even easier than on the case sides. It's just a matter of routing a shallow (1/8" deep) rabbet along each edge of the veneered face, just like you see in Figs. 16 and 16a.

After creating the raised fields, the ends of the front and back can be rabbeted to accept the drawer sides, as shown in Figs. 17 and 17a. The *drawer sides (F)* are cut from 1/2"-thick stock, and the rabbets are sized to match this thickness.

With the rabbets cut, the drawer sides and front and back can be glued up. Since the drawer bottom isn't added until later, there isn't really anything to help keep the drawer square. So while clamping it up you'll need to check carefully to make sure it's square.

Once the glue was dry, I routed a chamfer on the inside edge of the top of the drawer. You can see this being done in Fig. 18. Next, I used a rabbeting bit to rout a rabbet all around the inside of the bottom edge of the drawer (Figs. 19 and 19a). The *drawer bottom (G)* is cut from a sheet of 1/4" plywood to fit in this rabbeted opening in the bottom of the drawer. It's just glued in place. Shop Note: You'll need to round off the corners of the bottom to fit the rabbeted opening in the drawer.

DOWEL PINS. The final step to completing the drawer is to reinforce each corner with a couple of dowel pins. Taking a look at Figs. 15 and 15a, you can see that I drilled holes through the sides of the drawer into the front and back for some 1/8"-dia. dowel pins.

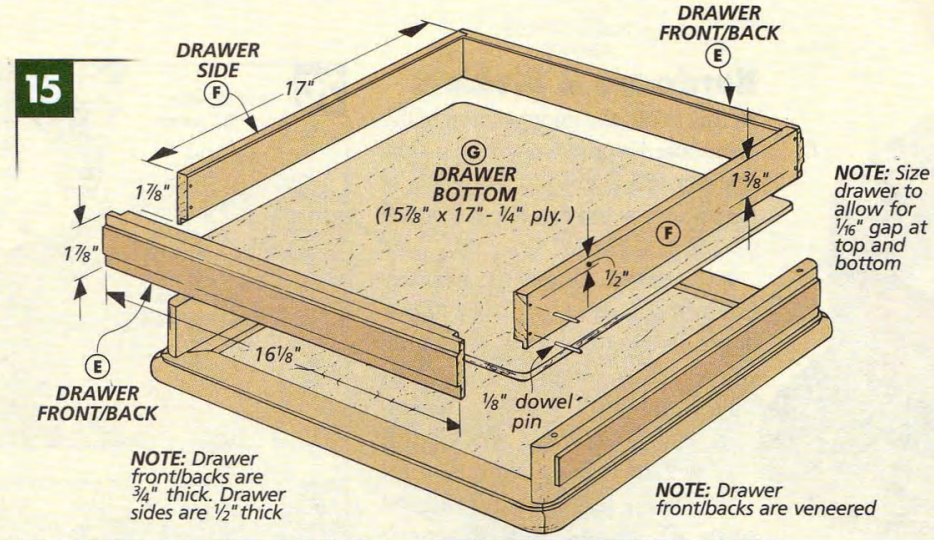

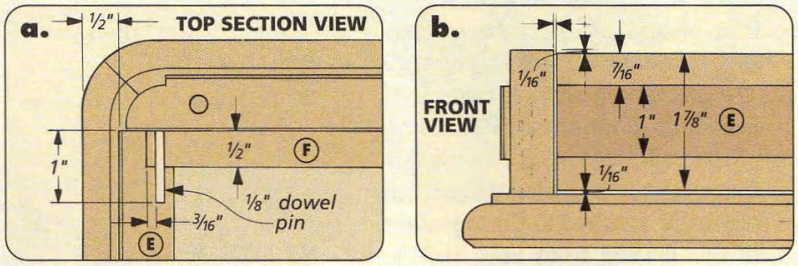

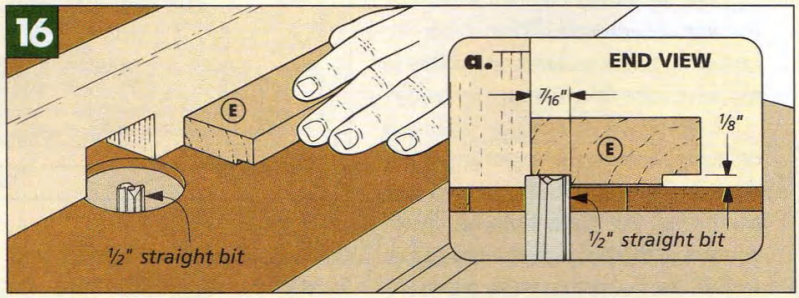

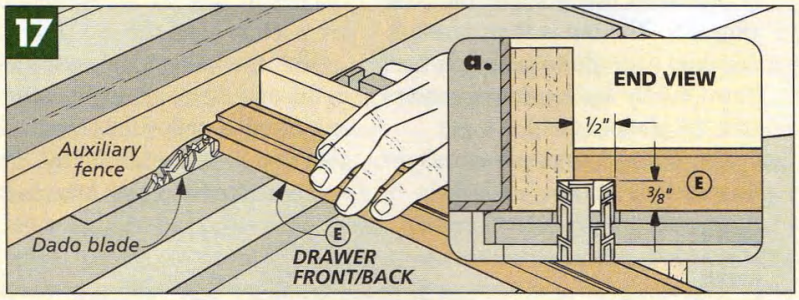

There's just one problem here. I couldn't find any 1/8"-dia. dowels in walnut to match the wood used in the drawer. So instead, I cut my dowel pins from a 1/8"-dia. birch dowel. Then after gluing the dowel pins in place, I colored the ends with a brown felt-tip marker.

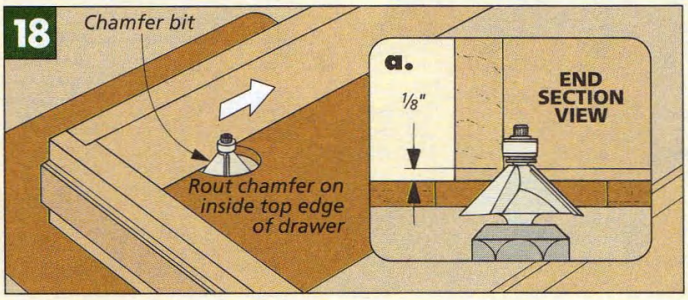

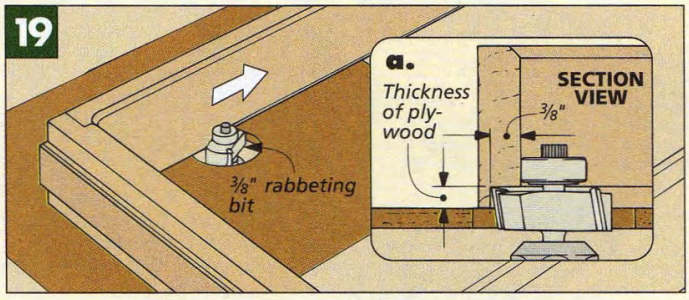

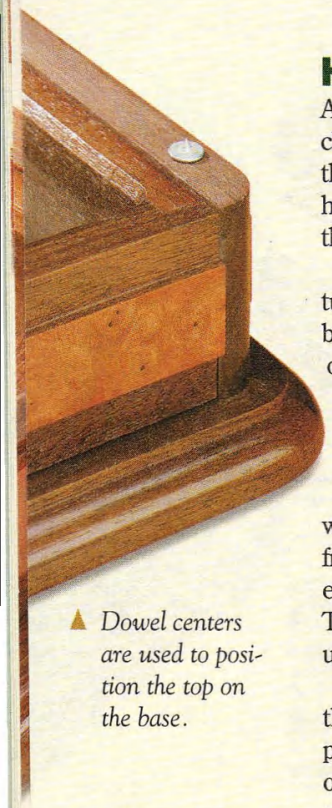

▲ *Dowel centers are used to position the top on the base.*

Hardware & Dividers

At this point, the construction of the chessboard is pretty much done — all that remains is to add a few pieces of hardware for the drawer and attach the top to the base.

BULLET CATCHES. One of the neat features of the drawer in this chessboard is the fact that it can be opened from either end. But this also created a bit of a design challenge. Without any kind of back or drawer stop, how do you keep the drawer centered when it's closed and prevent it from sliding out of the base whenever the chessboard is moved? The answer we came up with is to use a pair of bullet catches.

The bullet catches are installed in the underside of the top. Then catch plates are attached to the top edges of the drawer front and back to engage the bullet catches when the drawer is closed. The trick to installing these catches and plates is to make sure they line up correctly.

To do this, I started by drilling a centered hole in the top edge of the drawer front and back, as you can see in Fig. 20. Then I placed dowel centers in the holes in the drawer as well as the holes that were previously drilled in the sides of the case (Fig. 21). The top is then carefully centered over the base and pressed down lightly on the dowel centers (see the photos at left).

The dowel centers leave slight impressions on the underside of the top. These will help you to locate the holes for the bullet catches as well as the dowels that are used to align the top (Fig. 22).

With the bullet catches installed in the top, the next step is to make and install a couple of brass catch-plates on the top edges of the drawer. These are simply set into shallow notches that are cut across the top of the drawer front and back, as you can see in Fig. 23a. For more on this procedure, see page 18.

Before adding the top, I cut a couple of thin strips of wood and glued them to the bottom of the case, as you can see in Fig. 23. These *drawer runners (H)* raise the drawer up

▲ *While positioning the top with the dowel centers (see photo above) you can use a square to check the alignment of the top with the base.*

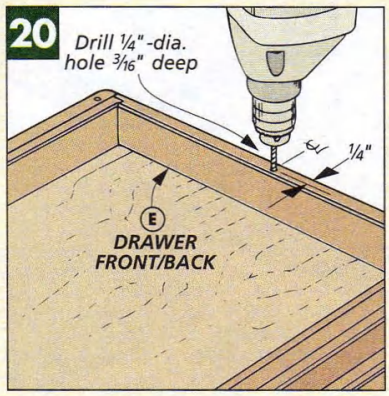

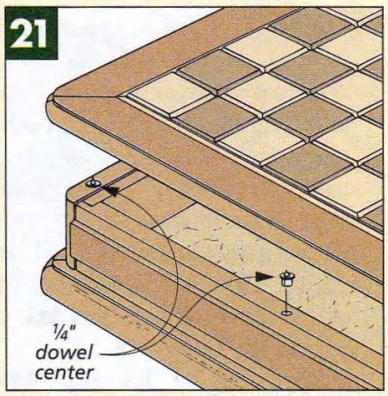

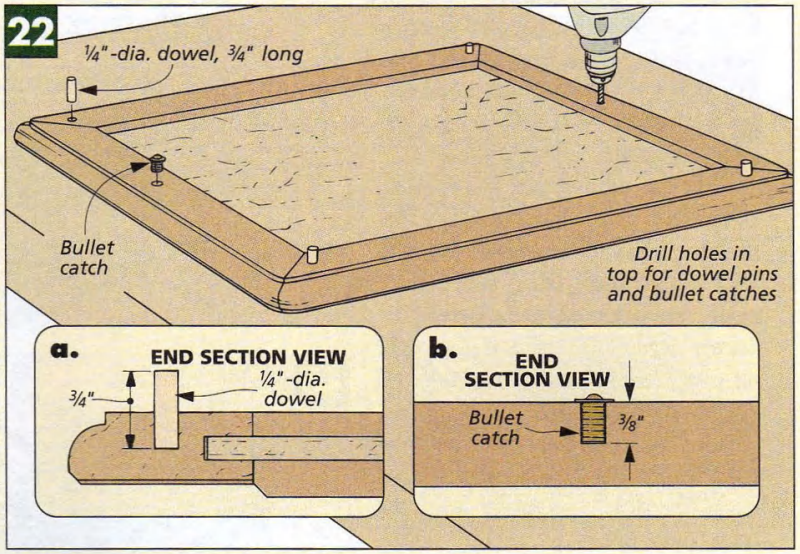

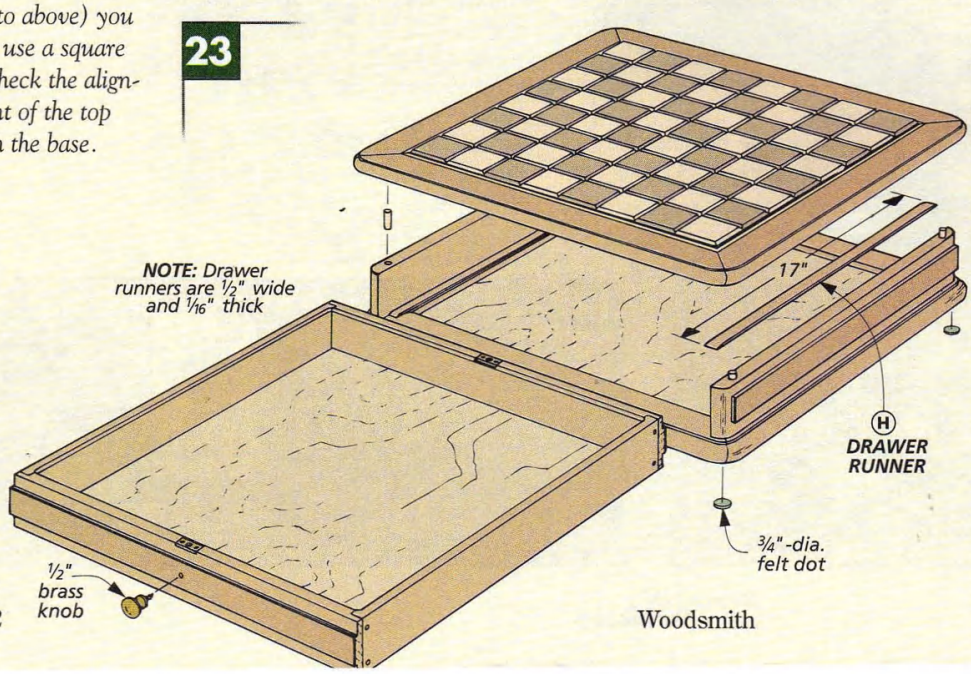

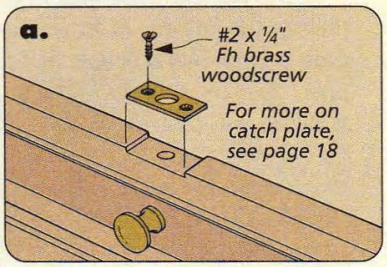

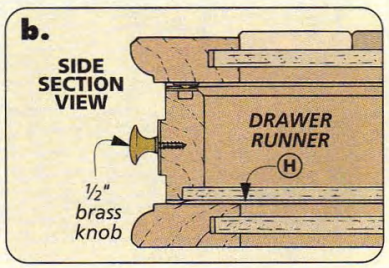

slightly (1/16") and prevent the drawer sides from wearing grooves in the bottom frame of the case. After the runners are glued in place, the top can be glued to the case. Then I attached a couple of brass knobs to the front and back of the drawer, as shown in Fig. 23b. Finally, I lined the drawer bottom with some felt glued to a piece of posterboard and I added felt dots to the case bottom.

DIVIDERS. If you wanted to, you could call the chessboard complete at this stage. But I decided to take it one step further. I chose to add some dividers to the *inside* of the drawer to keep the checkers and chess pieces from rattling around. The dividers create individual compartments for the chess pieces and a couple of spaces for the checkers.

These dividers are nothing more than thin strips of wood joined with half laps and assembled in the drawer to create a grid (Fig. 24).

To make the dividers, start by planing or resawing some 1"-wide strips. The trick here is getting the strips to the correct thickness. You want them to be as thick as the width of the kerf created by your saw blade (about 1/8"). This way, the mating pieces will easily fit together after you cut the half lap joints. It's better to make the strips a hair too thin rather than making them too tight and having to pound them together when it comes time to assemble the grid.

Once you've determined the correct thickness, you can cut the strips to length (Fig. 24a). You'll need nine *front-to-back dividers (I)* and six *side-to-side dividers (J)*. (Later, five of the long strips will be cut up into ten shorter dividers.)

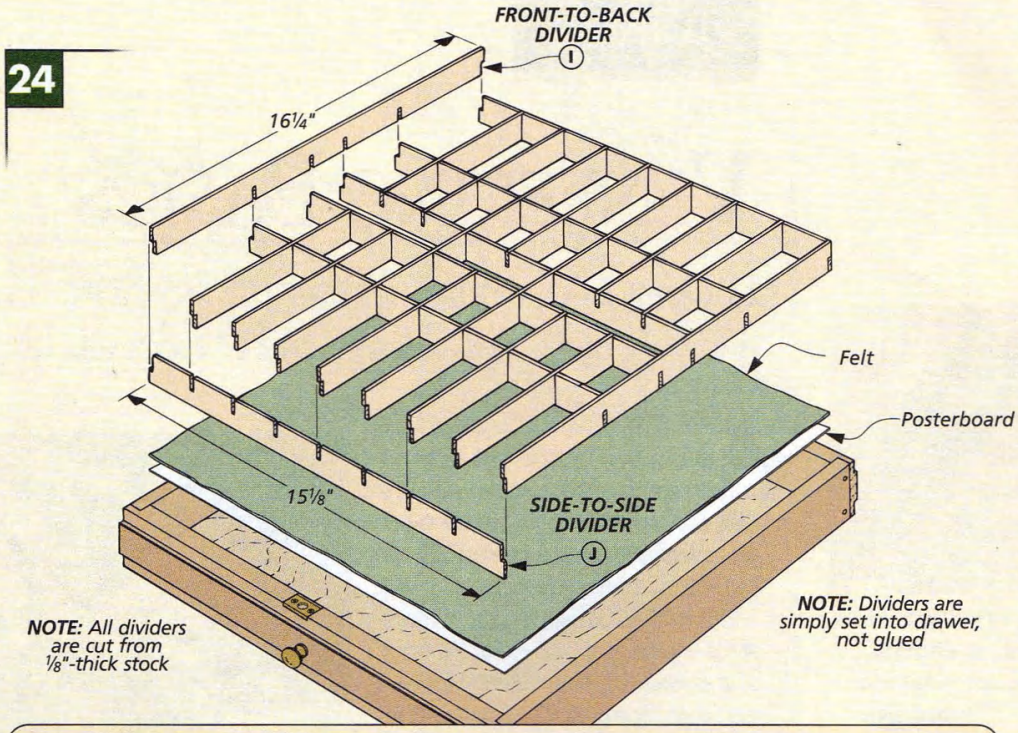

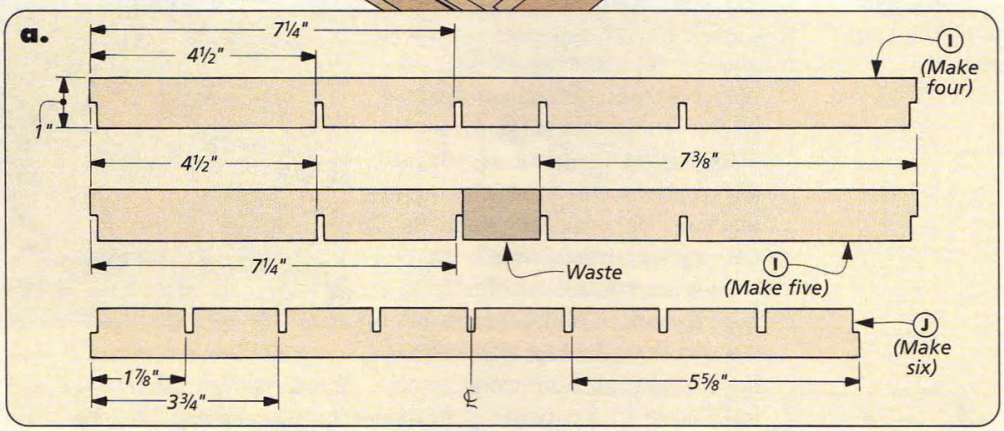

When you have all the strips cut to length, you can start making the half lap joints. To cut these, I used an auxiliary fence on my miter gauge. A stop block clamped to the fence is used to position the strips while cutting the half laps, as you can see in Fig. 25.

I stacked the strips up in order to cut the half laps. Not only is this quicker, but you can rest assured the spacing of the half laps will be identical (Fig. 24a).

Once you've cut all the joints, you can cut out the center section of five of the long dividers to create ten short divider pieces. The dividers are assembled into a grid inside the drawer without using any glue. (The half laps lock the pieces together.) Then you can add your checkers and chess pieces! W

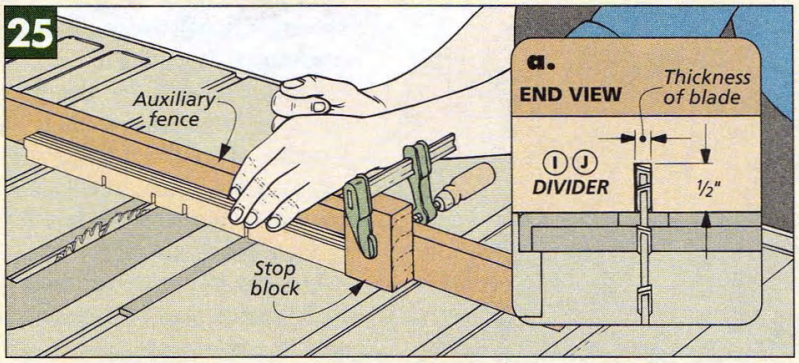

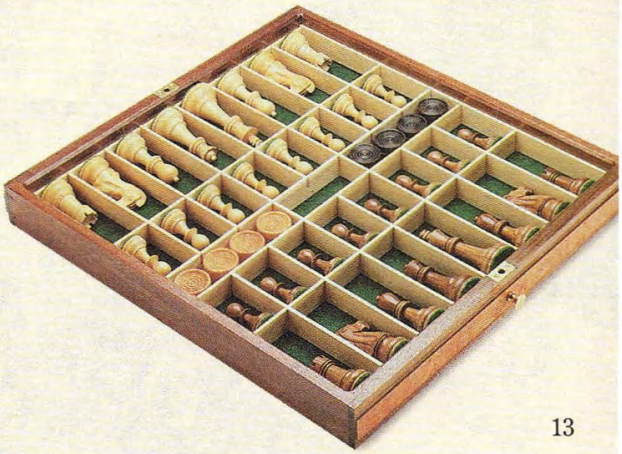

Half-lapped strips of wood are interconnected to crea a separate storage compartment for each playing piece

VENEERING BASICS

Looking to give your next project a facelift? Veneer is the key. And as an added benefit, you'll learn a new woodworking skill along the way.

All it takes is just one look at some of the beautiful veneers that are available to convince most woodworkers that veneering is something pretty special.

But aside from appearance, there are a couple of other great reasons to use veneer. For one thing, veneering is economical. It allows you to build a project with rare or expensive woods without having to take out a second mortgage on the house. And from a construction standpoint, a veneered panel made out of plywood or MDF is stronger and more dimensionally stable than one made from solid wood.

Despite this, veneer often gets a bum rap. Why? Well, I think a lot of woodworkers believe that veneering is messy, difficult work, involving a large (and expensive) veneer press and lots of specialized equipment. This may have been true in the past, but not any more. Modern adhesives make it possible for just about anyone to do veneering in their own shop, with a minimal investment in equipment.

EQUIPMENT. In fact, you may already have most of the items you'll need. First, you'll need a way to cut the veneer. A veneer saw (shown in the photo below) is the traditional method. These can be purchased for about $10. The blade on this saw doesn't have any set, so it makes a crisp, clean cut. But if you don't have one of these saws, you can also use a utility knife or even a rotary cutter (see photo in margin on opposite page).

Regardless of what tool you use for cutting, you'll also need a straightedge to guide the knife or saw. For this you can simply use a framing square or metal rule.

When it comes to gluing the veneer down, I prefer to use contact cement. A small (1" or 2"-wide) wooden roller comes in handy for pressing the veneer down. This kind of roller allows you to concentrate the pressure on a smaller area. You'll also need a roll of veneer tape to join pieces of veneer together (more on that later).

VENEER. I generally use traditional veneer (rather than foil-backed or self-adhesive types). These veneers are usually about 1/36" thick and come in a variety of wood species. Because it is fairly thin, veneer should be handled carefully to avoid cracking or damaging it.

Veneer is sold by the square foot, in random widths and lengths. If you want to cover a large surface area, you'll need to join two or more pieces together to create a larger sheet.

In order to get a good color and grain match, veneers are usually sold in consecutive sheets, as they

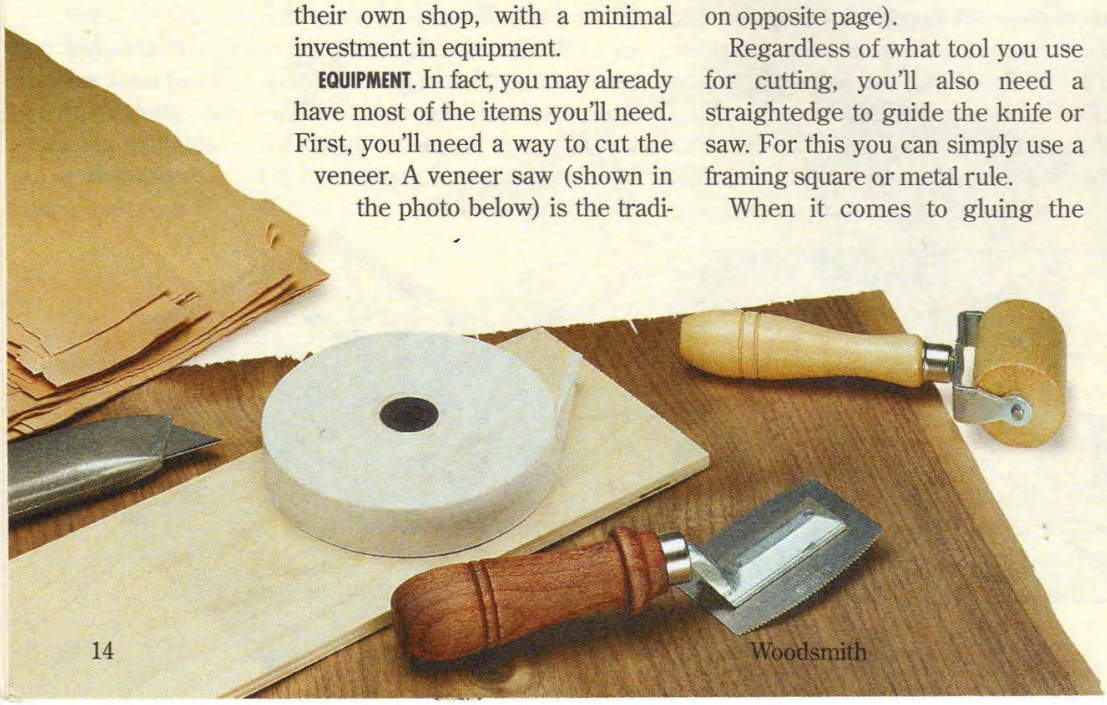

were sliced from the log. This stack of veneers is called a "flitch." The fact that all the sheets in a flitch look nearly identical can be used to create some interesting and striking visual patterns, as you can see in the box below.

CUTTING THE VENEER. The first step in using veneer is cutting it to size. For both the chessboard and the card box in this issue, I cut the veneer slightly larger than the piece I was covering. If you're using a utility knife, make sure you keep the blade tight against the straightedge. Because the blade is so thin, it tends to follow the grain, and can actually pull away from the straightedge. This isn't as much of a problem with the veneer saw, since it saws rather than slices it's way through the wood fibers.

JOINTING THE VENEER. If you're going to be joining two or more pieces of veneer together, it's important to joint the edges to get a good, tight fit. To do this, I clamp the pieces between two straight boards so the edges of the veneer are sticking out about 1/16" or so. Then I sand or plane the edges of the veneers flush with the boards.

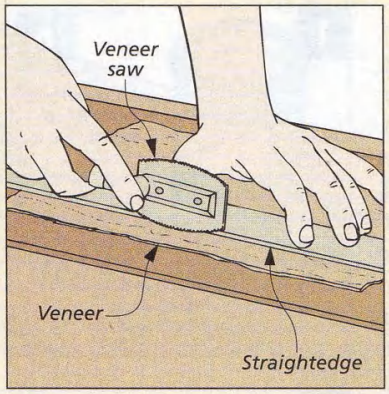

1 *To make a cut with the grain, start by making a couple of light scoring cuts with the veneer saw before cutting all the way through the veneer.*

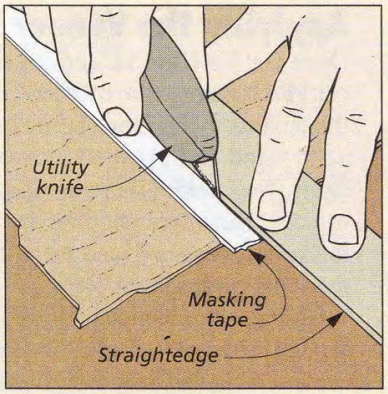

2 *You can avoid splintering the edge when cutting across the grain by simply placing a strip of masking tape over the veneer.*

▲ *A rotary cutter (available at fabric stores) can be used with a straightedge for cutting veneers.*

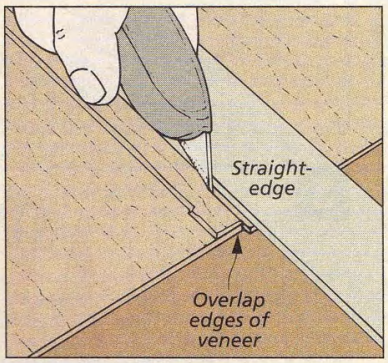

3 *To create a tight joint when joining two pieces of veneer, overlap the edges slightly and cut through both pieces at the same time.*

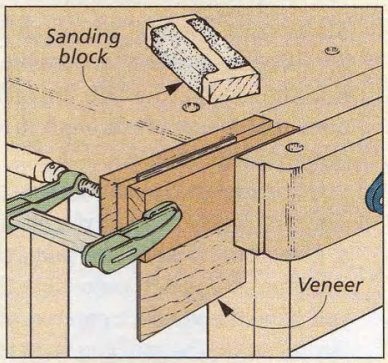

4 *Another way to create a smooth joint is to clamp the veneers between a couple of boards and joint the edges by sanding.*

VENEER PATTERNS

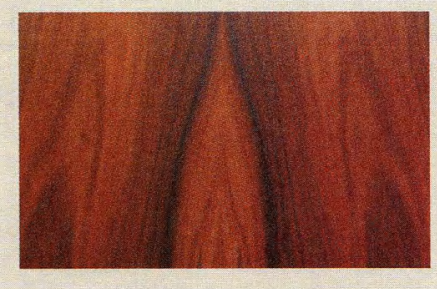

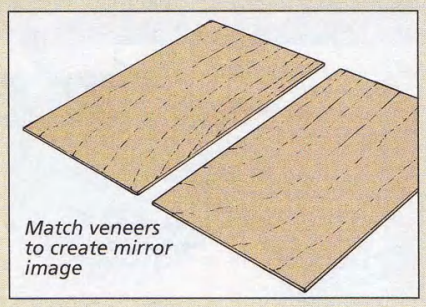

Book Matching. *Book matching is a common effect achieved by joining two or more consecutive pieces of veneer to create a mirror image of the grain pattern.*

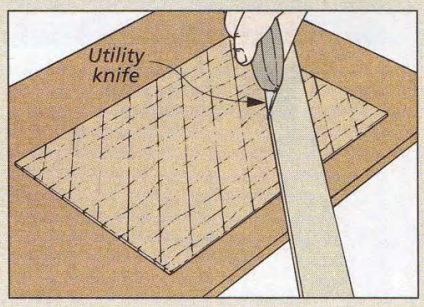

Herringbone. *To create a herringbone pattern, cut strips of veneer at a 45° angle to the grain. Then orient the strips so the grain runs in opposing directions.*

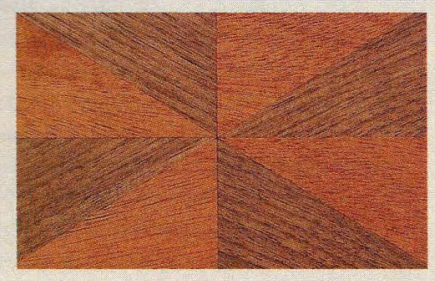

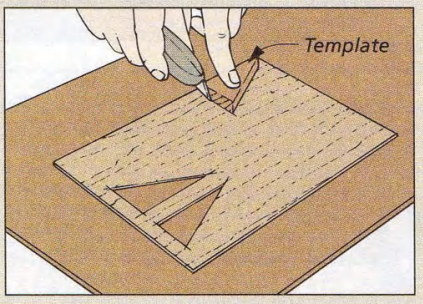

Pinwheel. *For a pinwheel effect, use a template to cut matching triangles of veneer. Then piece the triangles together. Contrasting woods highlight the effect.*

Applying the Veneer

Once you have the veneer cut, you can glue it down to the substrate. For the projects in this issue, I used both solid wood and plywood as a substrate. You could also use hardboard or MDF. The important thing is that the surface is smooth and flat so that the veneer will adhere well.

Gluing the veneer down is straightforward. First, contact cement is applied to both the veneer and the substrate, as you can see in Fig. 1. In most cases, you'll need to apply at least two or three coats of adhesive, letting each coat dry before applying the additional coats. Make sure you roll or brush the adhesive on as evenly as possible so that there won't be any imperfections that telegraph through to the surface of the veneer.

Once the last coat of adhesive has dried, the veneer can be placed onto the substrate. Since the adhesive will grab on contact, make sure that you have the veneer centered over the substrate the way you want it. If you're working with larger pieces, you may want to take a look at the tip in the margin at right.

As soon as the veneer is in place, start rolling it out as shown in Fig. 2.

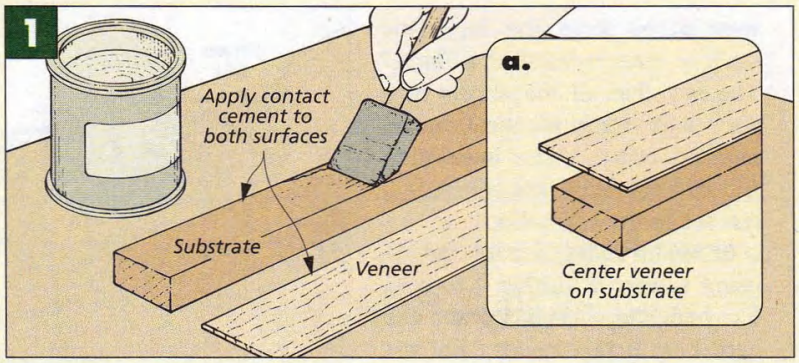

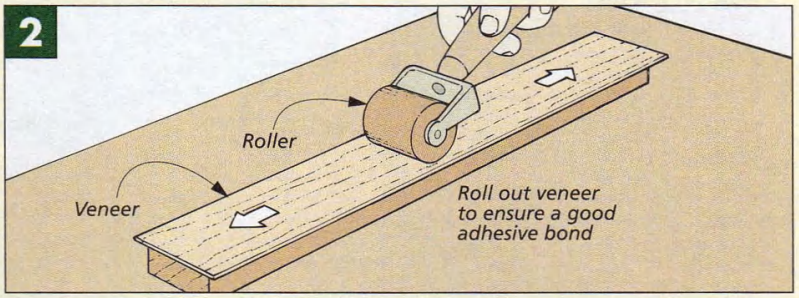

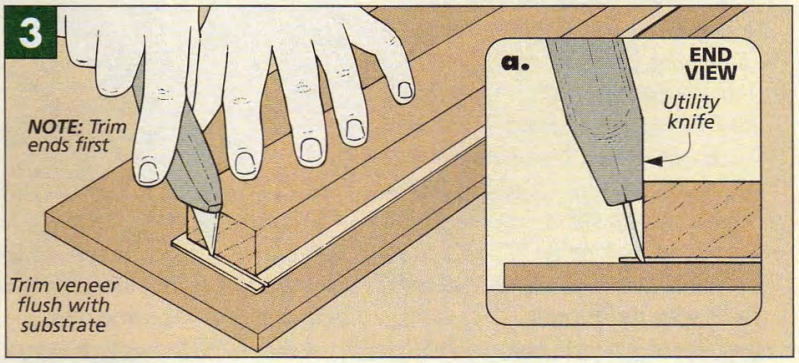

INLAY STRIPS

Inlay strips are a close cousin to veneer. They are narrow strips of wood that are usually applied as a border or accent on a project. Although you can use solid, one-piece inlays (called stringing) most inlays are created from glued-up pieces of wood to create striking patterns.

Applying an inlay is just a matter of cutting a groove or rabbet in your workpiece according to the width and thickness of the inlay. Then the inlay is glued in place. Once the glue is dry, the inlay can be sanded or scraped lightly to ensure that it's flush with the surface.

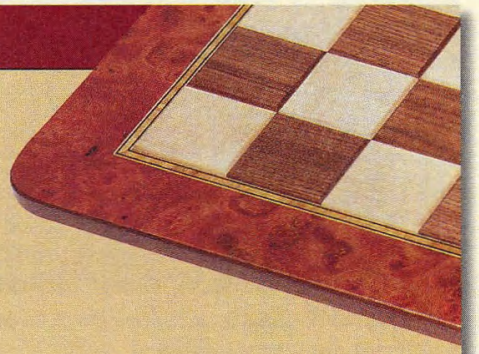

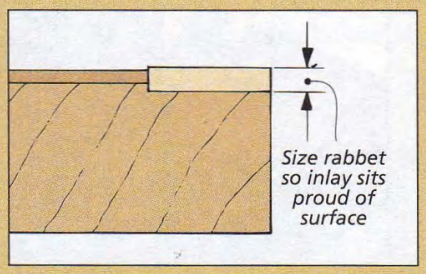

Cutting the rabbet. *Size the rabbet (or groove) to match the width of the inlay. But make the depth just a hair less than the thickness of the inlay.*

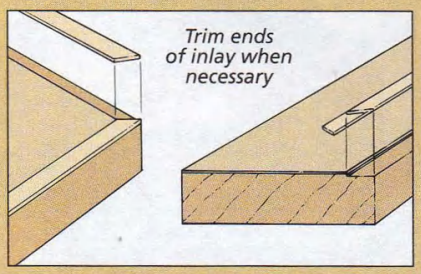

Trimming the inlay. *Depending on the pattern of your inlay strip, you may need to carefully miter the ends and match up the mating pieces at each corner.*

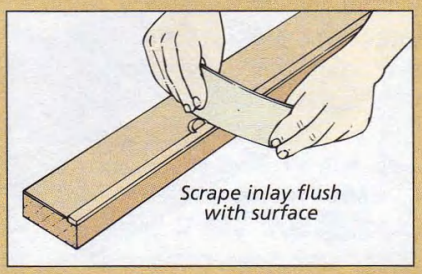

Scraping the inlay. *After gluing the inlay strip in place, use a cabinet scraper to carefully scrape the inlay flush with the surface of the project.*

Work from the center out toward the edges, rolling out any air pockets. Contact adhesive forms a better bond under pressure, so don't be afraid to put a little muscle into it as you use the roller.

TRIMMING THE VENEER. Once the veneer has been rolled out, you can trim the edges flush with a utility knife, just as is shown in Fig. 3. Trim the end grain first and then trim the long grain edges.

MATCHING VENEERS. If you're covering a large surface, chances are that you will have to join two or more pieces of veneer together. The key to doing this is to assemble the pieces before gluing them down to the substrate. That way you can make sure the joint lines are nice and tight.

To hold the pieces of veneer together, I use veneer tape. This "tape" is just lightweight paper with a gummed adhesive on one side. Holes in the tape allow you to see "through" it as you're placing it over a joint. To use the tape, all you have to do is moisten the adhesive side and press it in place. If you take a look at Fig. 4, you can see how several strips of veneer tape are used to piece the veneer together.

Although the tape holds the sheets of veneer together, they can pull apart slightly under the force of being rolled out. To prevent this, I like to glue the edges of the veneer together. At first, this may sound impossible. After all, the veneer is only 1/36" thick. But if you take a look at Fig. 4b, you'll see how it's done. Just fold the taped pieces of veneer back and brush some glue along the edges. Then fold the pieces back and clamp them flat for a few minutes while the glue dries.

Gluing the matched veneers down to the substrate is really no different than gluing down a single piece of veneer. Just make sure to roll the veneer from the center out.

Once you've got the veneer in place, you can remove the tape by moistening it with a damp sponge and scraping or peeling it off (Fig. 6). Light scraping or sanding across the entire surface of the veneer, as demonstrated in Fig. 7, will remove any residual adhesive and prepare the surface for finishing. Just don't get carried away with this step. It's easy to sand or scrape right through the veneer, spoiling an otherwise perfect job. W

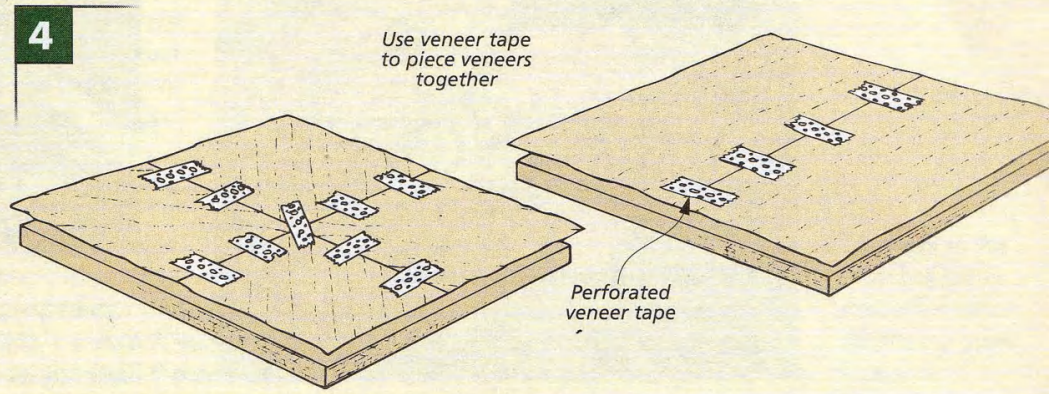

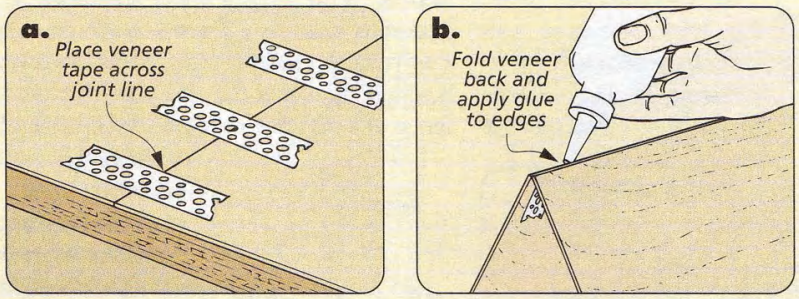

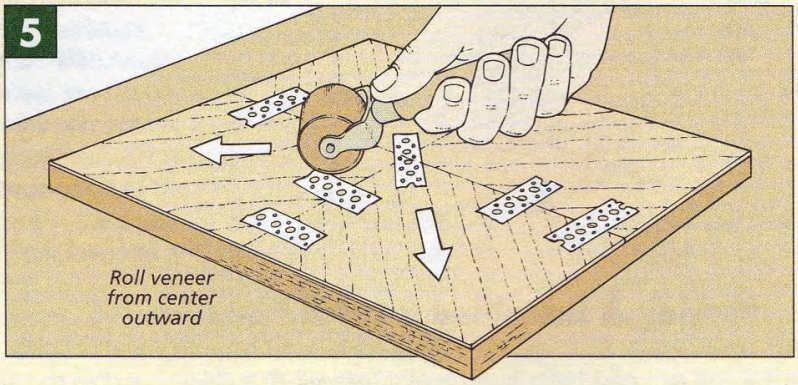

▲ *Dowels can be used to prevent the veneer from contacting the substrate until you have it positioned where you want it.*

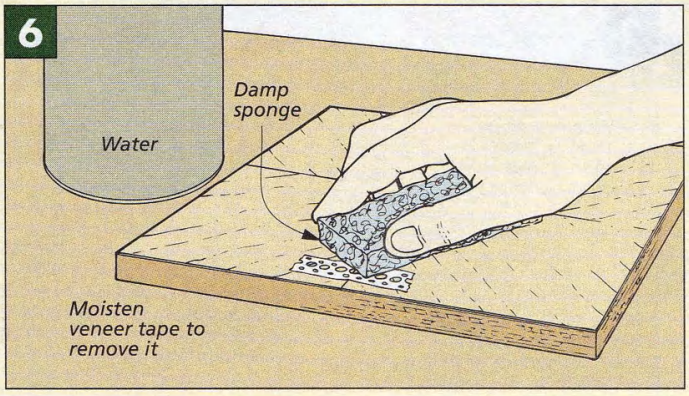

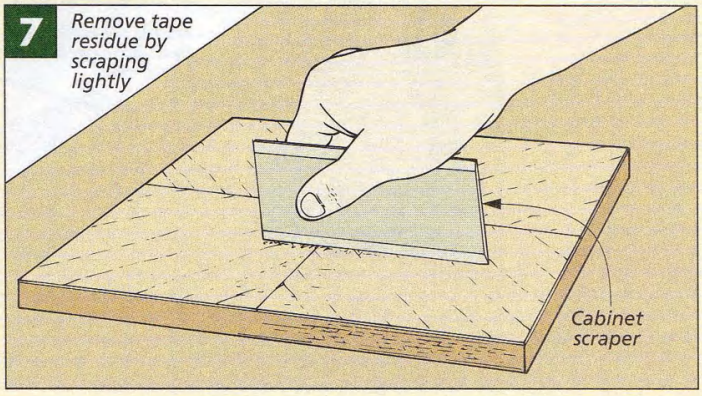

SHOP NOTES

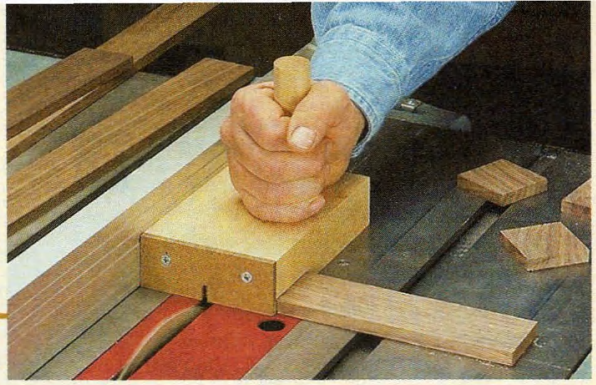

Cutting Small Squares

To build the chessboard on page 6, I needed quite a few 1⅞"-square hardwood blocks — sixty-four in all. The trick, of course, was getting the two cuts exactly the same (ripping the piece to width *and* crosscutting it to length). But I came up with a method for making both cuts with *one* fence setting. The blanks are ripped to width first. Then they're safely crosscut with a simple jig, using the rip fence as a stop, see photo.

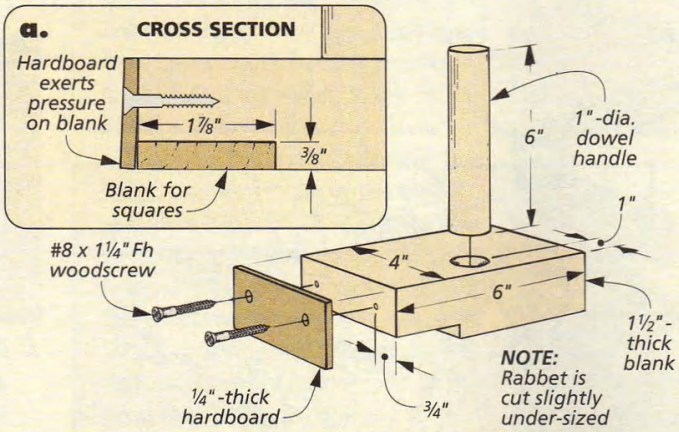

JIG. My jig was made from a 1½"-thick block of hard maple. (But there's no reason it couldn't be made from a 2x6 scrap.) This block has a wide rabbet cut on its end. The depth (height) of this rabbet matches the thickness of the stock.

But the important thing is the rabbet's width — it should be a *hair* narrower than the width of the squares you're going to cut. This way, when you screw a piece of ¼" hardboard to the end of the jig, the hardboard will apply a little pressure to the workpieces, keeping them from slipping (detail 'a').

All that's left is to add a dowel handle, and you're ready to cut a few squares.

CUT SQUARES. To make the squares, the first thing to do is rip several blanks to width. (The chessboard squares were 1⅞" wide.) Then without moving the fence, slide a blank in the jig and set it on the saw, pushing the blank against the rip fence. (You may need to adjust the screws on the hardboard if the tension is tight or loose.)

Now simply push the jig (and blank) through the saw to crosscut the square. Then remove the piece and slide the blank back against the rip fence. W

Making & Installing a Catch Plate

Most drawers close against a stop or a case back, but the drawer in the chessboard opened from either end. So how do you keep it in place? I decided to use bullet catches. But the catches I found didn't have flat catch plates. So I decided to make my own.

BRASS STRIP. At a local hobby store, I bought a short strip of ½"-wide brass that was .032" thick (about 1/32"). Then I used a hacksaw to cut two 1"-long plates from this piece and removed the burrs on the ends with a file.

DRILL HOLES. Next, three holes are drilled in each plate: a centered ¼"-dia. hole for the bullet catch and two small countersunk holes for the #2 screws that will be used to attach it to the drawer. The trick was holding this tiny piece while drilling. So I set it on a small scrap block and clamped them in a handscrew (Fig. 1).

CUT MORTISE. Now shallow mortises can be cut to hold the catch plates. (A hole was drilled earlier in these edges for positioning the top.) I decided to rout the mortise, using a hand-held router with a clamped-on support block, as shown in the photo on page 31. I didn't rout the entire mortise, however. I cleaned up the ends with a chisel, carefully paring from the edges toward the center (Fig. 2). W

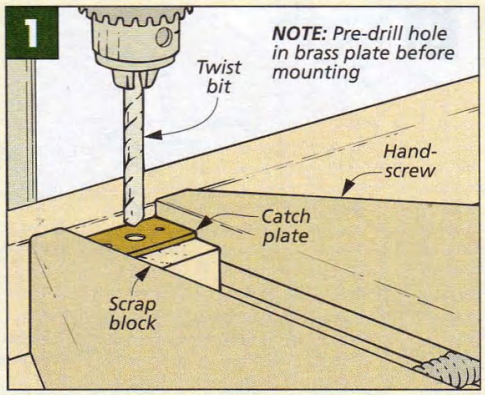

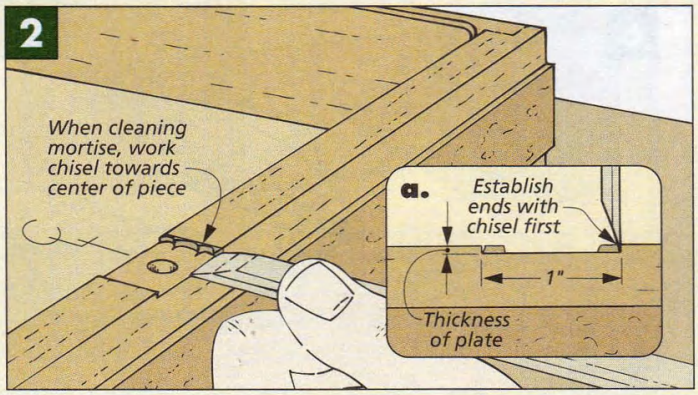

Miter Box For Small Pieces

In order to build the card case on page 32, I needed to work with quite a few small pieces, mitering some at 45° *and* crosscuting others at 90°. For this project, I decided to use my handsaw for these cuts. But I was a little stumped as to how I was going to make these cuts accurately? The solution was to build a scaled-down version of a common miter box, as you can see in the photo.

However, there were a couple improvements I wanted to make to the miter box. First, the kerfs needed to be sized to match the blade of my dovetail saw so there wouldn't be any "play." And I wanted these kerfs to be adjustable so that as these kerfs widen over time they can be closed up and not lose any accuracy.

This really wasn't too difficult: I built a two-piece miter box, as you can see in Fig. 1. An adjustable H-shaped base is attached to a fixed base with machine screws, so you can adjust the gaps to match your handsaw blade *and* close them up when they get wider with use.

ADJUSTABLE BASE. To make the miter box, I started with the adjustable base. It's just three pieces of plywood glued together into an H-shape. I cut a 1/4"-deep dado through the side pieces to keep the center piece aligned, and in this center piece, I drilled four countersunk holes for a 1/4"-20 flathead machine screw. When gluing the base together, I cut two extra pieces to support the assembly and make sure the side pieces ended up square, as you can see in Fig. 2 below.

FIXED BASE. One of the scrap pieces I used to support the assembly became my fixed base. I transferred the position of the pilot holes to this piece and cut 5/16"-wide slots at these points.

To secure the two bases, I added four wood "washers" to the bottom of the fixed base. These fit into a groove cut into the bottom of the fixed base, and they hold a T-nut that match the threads on the machine screw. (To keep the T-nuts from splitting the wood, mount them into a long 3/8"-thick blank and then cut them into the 2"-long washers.)

MITER ADJUSTABLE BASE. At this point, you're ready to cut the adjustable base apart — two 45° cuts and one 90° cut, as shown in Fig. 3. (I used my table saw, but this could also be done with a radial arm saw or miter saw.)

ATTACH BASES. Now the miter box can be assembled (Fig. 4). Because of the wood washers, this is almost a one-handed operation. Simply set the saw blade between the two pieces and tighten them down. As the gap widens with use, you can close up the kerfs by loosening the screws and repositioning the adjustable base.

The kerfs on this miter box can be adjusted to match the blade of your hand saw.

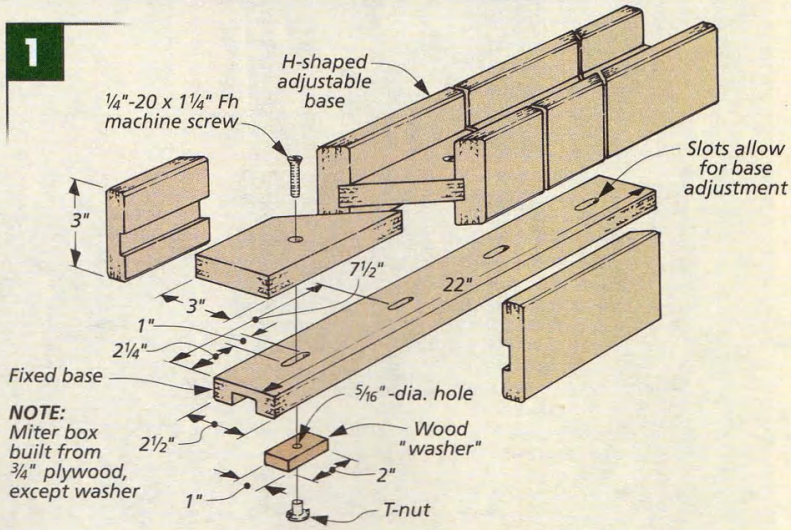

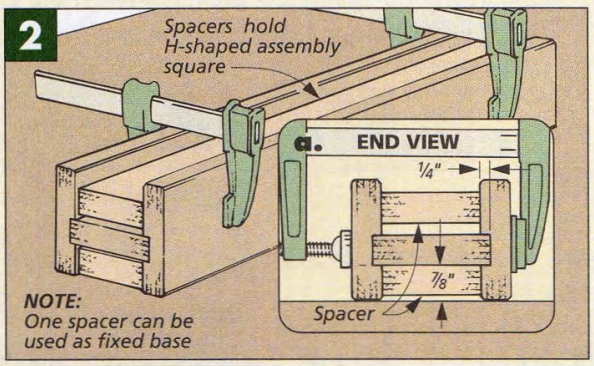

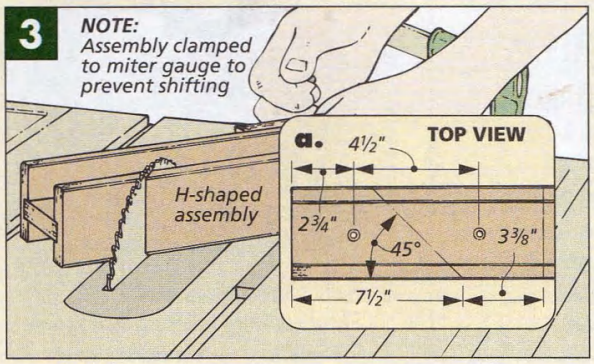

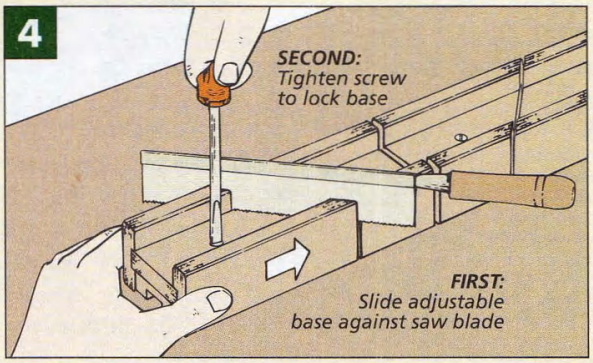

BEAD-FRONT BOOKCASE

Build a frame and panel case with two drawers — in just two days.

Designing a project that can be built quickly is easy enough. But it often means leaving out a lot of the details. And for woodworkers, it's these details that make a project interesting to build.

However, details don't have to be difficult. And this bookcase is a great example of this. For instance, the two small drawers are joined with simple locking rabbets; all the bead profiles are created with a single bit on the router table, and the frame and panel construction of the sides is straightforward too.

Another thing that keeps this bookcase from being difficult to build is its size. It's not very big — I wanted it to have a small "footprint" so it would fit in just about any nook or cranny around the house, as you can see in the two photos here. This means you won't be wrestling with a large assembly. And since the shelves and top are plywood, there aren't any wide panels to glue up either.

All in all, it's a project you'll be able to complete in just a couple of days in the shop. The end result will only *look* like it took a long time to build.

MATERIALS & SUPPLIES

A Front Stiles (2)	3/4 x 1 1/4 - 47	**P** Top Panel (1)	3/4 ply. - 12 x 23
B Back Stiles (2)	3/4 x 2 - 47	**Q** Top Trim (1)	1/2 x 3/4 - 23
C Side Rails (6)	3/4 x 2 - 8 1/2	**R** Front Edging (1)	1/2 x 1 - 24
D Lower Panels (2)	1/4 ply. - 8 1/2 x 13 1/2	**S** Side Edging (2)	1/2 x 1 - 13
E Upper Panels (2)	1/4 ply. - 8 1/2 x 24	**T** Dwr. Fronts (2)	3/4 x 6 7/16 - 17 7/8
F Dwr. Dividers (3)	3/4 ply. - 11 x 20 3/4	**U** Dwr. Sides (4)	1/2 x 6 7/16 - 11
G Back Panel (1)	1/4 ply. - 21 1/2 x 42 1/4	**V** Dwr. Backs (2)	1/2 x 6 7/16 - 17 3/8
H Face Stiles (2)	3/4 x 2 - 47	**W** Dwr. Btms. (2)	1/4 ply. - 10 1/2 x 17 3/8
I Adj. Shelf (1)	3/4 ply. - 10 7/8 x 20 3/8	**X** Dwr. Guides (4)	3/4 x 1 9/16 - 11
J Edging (4)	1/2 x 1 - 18	• (4) 1 1/4"Wood Knobs w/Screws	
K Back Stiffener (1)	3/4 x 1 1/2 - 20 1/2	• (4) Spoon-Style Shelf Supports	
L Front Rail (1)	3/4 x 1 - 20 1/2	• (7) #8 x 1 1/4" Fh Woodscrews	
M Frame Front (1)	3/4 x 2 1/2 - 23	• (7) #8 x 1 1/2" Fh Woodscrews	
N Frame Side (2)	3/4 x 2 1/2 - 12 1/2	• (1) Nylon Glide Tape (4 Feet)	
O Frame Filler (1)	3/4 x 1 - 18	• (52) 18-Gauge Nails (3/4" Long)	

▲ *Need extra storage space? This case only takes up two square feet and looks great in any room.*

Construction Details

OVERALL DIMENSIONS:
48½"H x 24"W x 13"D

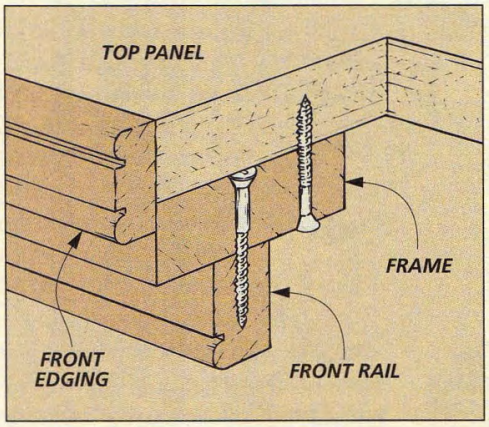

Top & Frame. A simple frame makes it easy to attach the top panel to the rails on the case. Plus, it helps support the 1"-wide edging.

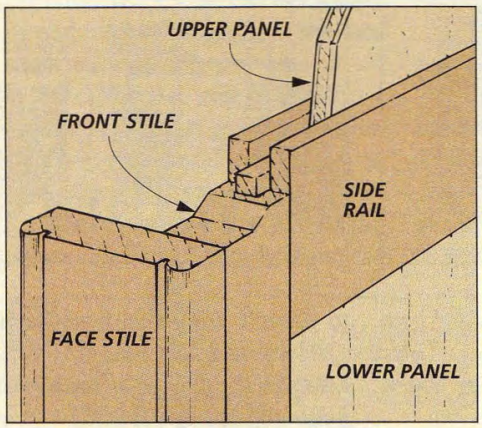

Stub Tenon & Groove. Building frame and panel assemblies using stub tenon and groove joints takes no time at all and is plenty strong.

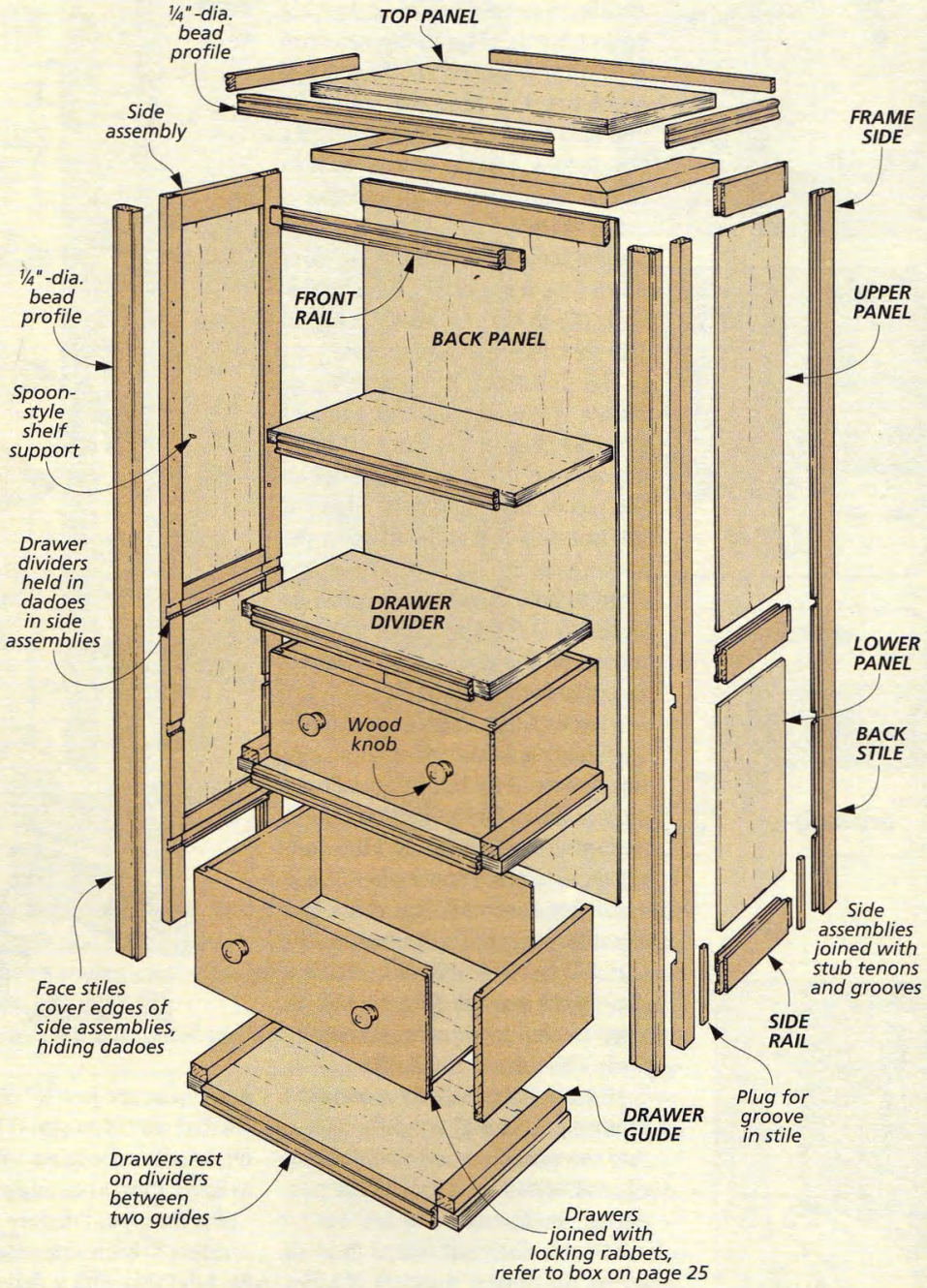

CUTTING DIAGRAM

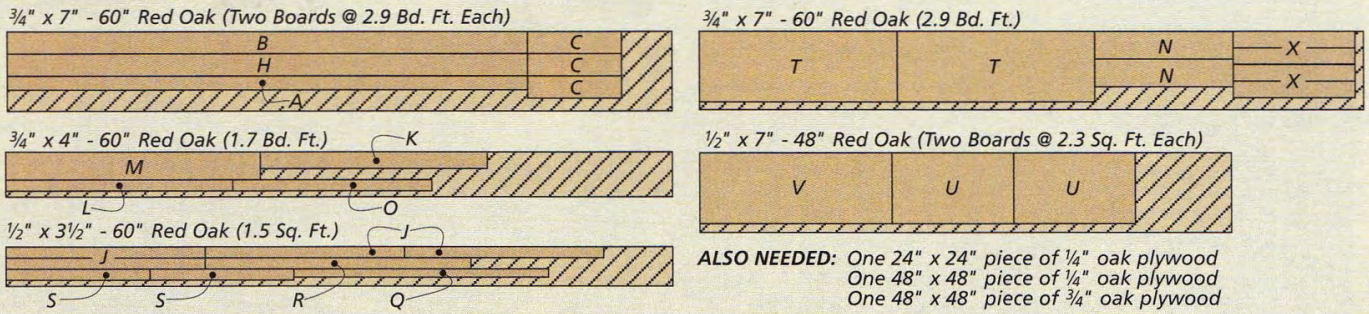

ALSO NEEDED: *One 24" x 24" piece of ¼" oak plywood*
One 48" x 48" piece of ¼" oak plywood
One 48" x 48" piece of ¾" oak plywood

Case

Building a case for books can be a big project, but there are a number of reasons why this case won't give you any problems. The joinery is simple — just stub tenons and grooves plus a few dadoes. And the case is small so the assembly is more manageable.

SIDE FRAMES. I started work on the frames at the sides, cutting the *front stiles (A)*, *back stiles (B)*, and *side rails (C)* to size, as shown in Fig. 1. (All six rails are the same size.)

The first thing to do with these pieces is cut the stub tenons and grooves (Fig. 1a). I like to cut the grooves on the inside edges of all the pieces first (and *both* edges of the two rails that will end up in the center), as in Fig. 1b. These are sized to hold 1/4" plywood (which is closer to 3/16" thick). Then the stub tenons on the ends of the rails can be cut to fit these grooves.

PLUGS & PANELS. Right away, I made 4 1/2"-long plugs and glued them into the grooves (Fig. 1a). The plugs create shoulders for the bottom rails to rest on during assembly. Plus, having them in place now makes it easier to dry assemble the sides and size the panels. The *lower panels (D)* will be 13 1/2" tall (Fig. 1). But the *upper panels (E)* should be sized so the upper rails will end up flush with the top of the stiles.

ASSEMBLE SIDES. With the panels cut to size, you can glue up the sides. And since the plywood isn't going to expand or contract, I glued the panels into the frame.

DIVIDERS. The next pieces to work on are the *drawer dividers (F)*. For now, these are just 3/4" plywood panels that are cut to size (Fig. 1). Later on, hardwood edging will be added to cover their front edges.

But first, I cut dadoes to hold the dividers in each side assembly (Fig. 2). I did this with a dado blade (set to match the thickness of the dividers) and using the rip fence as a stop so the dadoes on each assembly would line up perfectly.

SHELF SUPPORT HOLES & BACK. There are still a couple steps to complete before the case can be assembled.

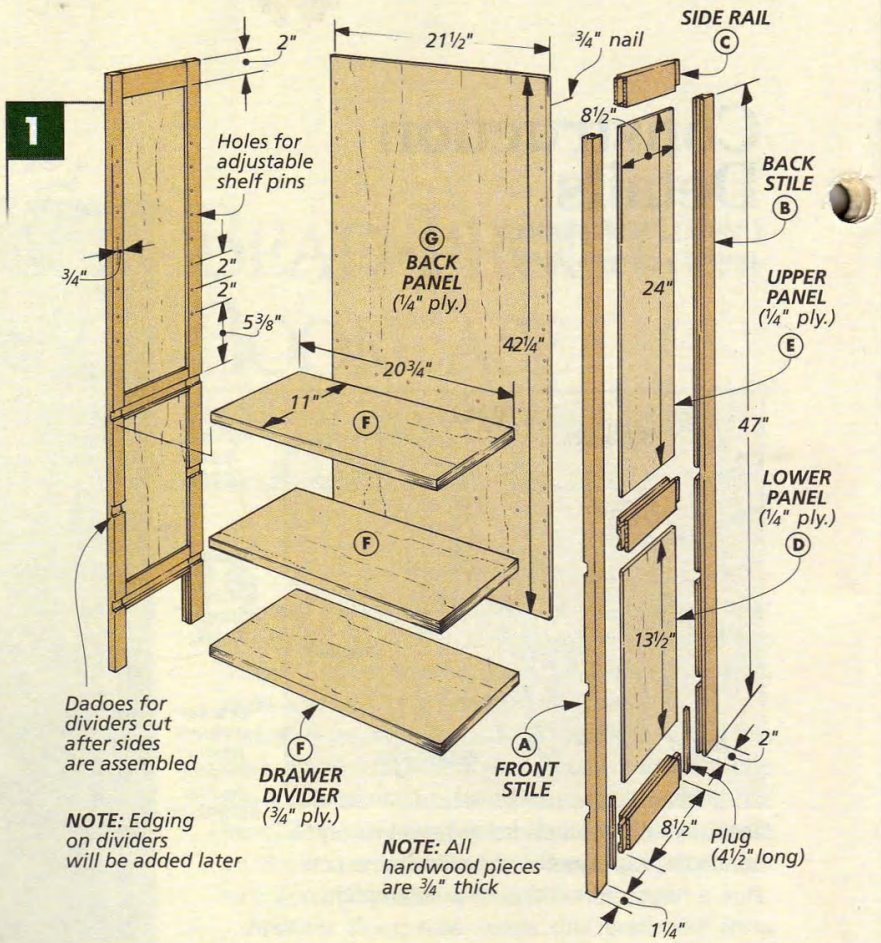

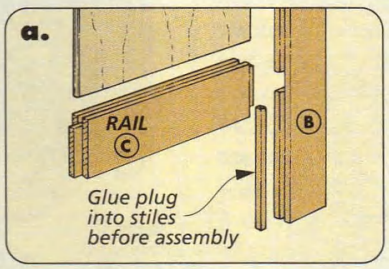

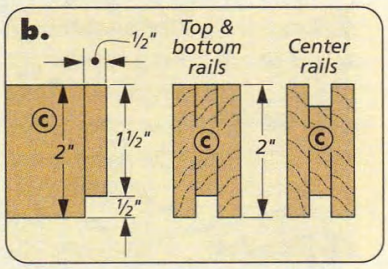

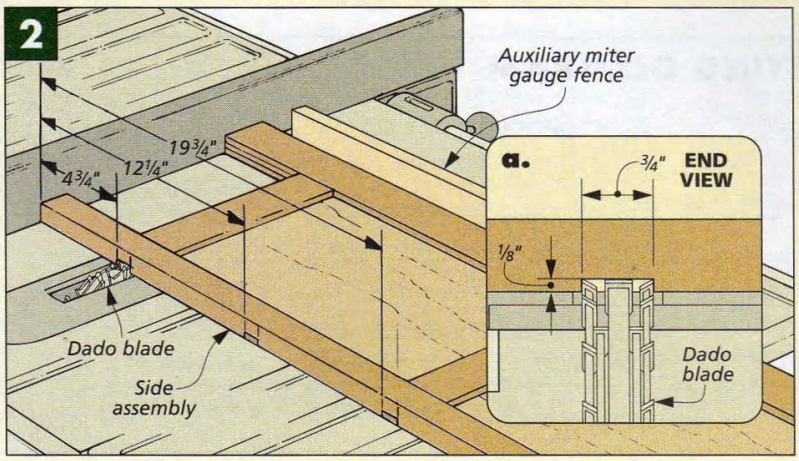

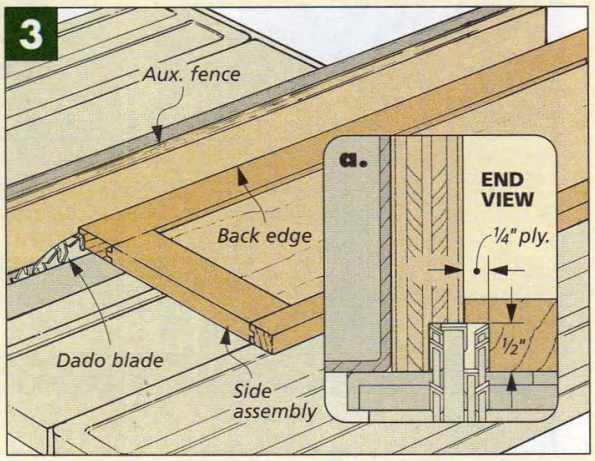

For instance, a series of holes needs to be drilled for the pins that will support the shelf later (Fig. 1).

Also, to help keep the assembly square, I decided to add the 1/4" plywood *back panel (G)*, as shown in Fig. 1. But before cutting it to size, you'll need to rabbet the back edge of each side assembly (Fig. 3).

CASE ASSEMBLY. Assembling this relatively small case is straightforward. The only thing to mention is that the back is glued (and nailed) to the dividers — not just the sides. This will prevent the back from being forced away from the dividers as the drawers are pushed in.

FACE STILES. Now it's time to work on the front of the case. First, I cut a couple of *face stiles (H)*, as shown in Fig. 4. All you need to do to these pieces is rout a 1/4"-dia. bead along each edge (Fig. 4a). And when gluing the stiles to the case, you'll want to be careful near the top. Since there's no top rail on the case (yet), the edges of the case can flex a little, so make sure the edges of the face stiles and case end up flush.

SHELF. While the glue was drying, I cut the *adjustable shelf (I)* to fit in the case. (I allowed for a 1/16" gap on each edge, as shown in Fig. 4b.)

EDGING. Now's the time to hide the plywood edges on the dividers and shelf. The *edging (J)* I used was cut 1" wide (tall) and has the same 1/4" bead profiles routed on their edges as the face stile (Fig. 4c).

With the case assembled and the back on, you're not going to be able to clamp the edging from front to back. But that's okay. I didn't use clamps at all. Instead I simply taped the edging in place, making sure the top edge was flush with the plywood, as shown in the margin drawing at right. (Packing tape with its "ribbed" strands works best.)

FRONT RAIL & BACK STIFFENER. There are just two more pieces to add — both at the top of the case. At the back, I added a *back stiffener (K)*. As you can see in Fig. 5, it's cut to fit tight between the sides and then glued to the back panel (Fig. 5a).

The last piece to add is a top *front rail (L)*. It's similar to the edging, but it's cut to length to fit between the sides of the case (*not* the face stiles), and the bead profile is routed only on the bottom edge.

To attach this rail to the case, there are 1/2" deep rabbets that need to be cut on the front of the rail. But you'll want to sneak up on the width of these rabbets so the rail fits tight between the face stiles.

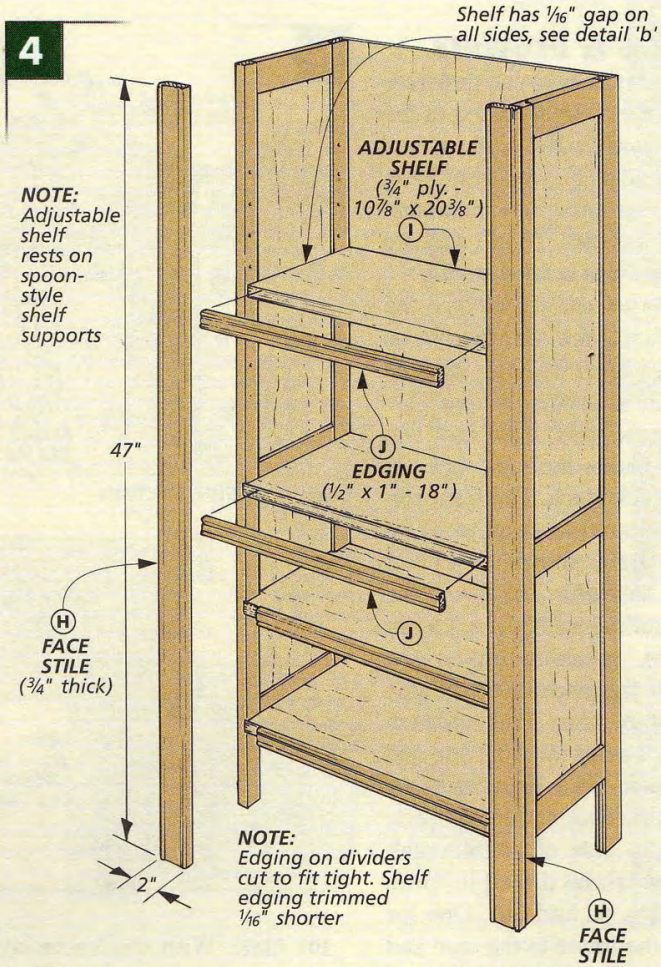

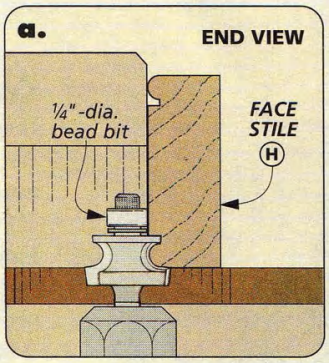

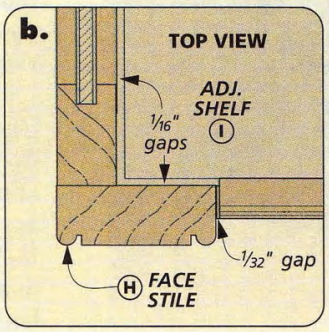

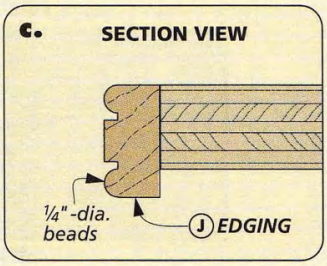

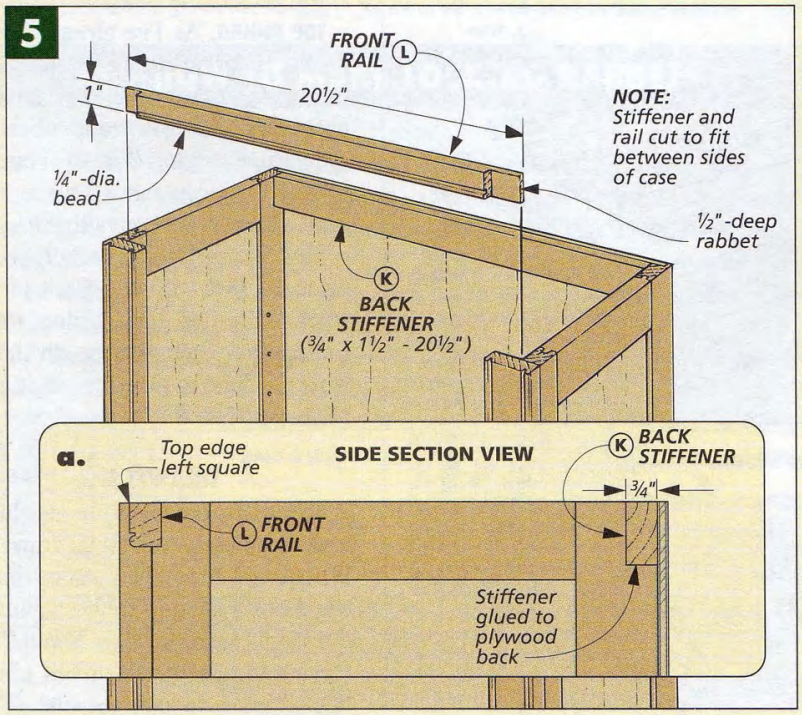

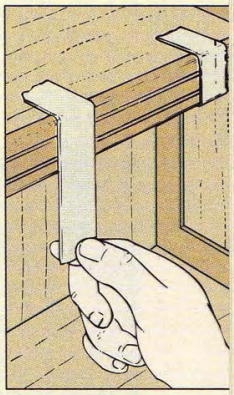

▲ *You can't clamp the edging to the plywood shelf and dividers, but packing tape will hold the edging just fine.*

Case Top & Drawers

Before work can begin on the drawers, a top needs to be added to the case, as shown in the photo at left. There are actually two layers here. First, there's a frame that runs around the top of the case. Then I added a plywood top with beaded edging.

FRAME. As you can see in Fig. 6, the frame is just three mitered pieces (and later, a filler), but it provides an easy way for attaching the top.

The *frame front (M)* and two pieces of *frame side (N)* are cut from ½"-thick stock. The front corners are mitered so there won't be any end grain showing. With a U-shaped assembly like this, I like to start with the front piece. I miter both ends, sneaking up on the length until the piece aligns with the corners of the case. Then on each side piece, I miter the front end and trim the back end to length until it's flush with the back of the cabinet.

Next, two sets of countersunk pilot holes can be drilled in these pieces (Figs. 6a and 6b). One for attaching the frame to the case and another for attaching the top panel to the frame later on.

FILLER. After attaching the frame to the case, I filled the opening at the back of the frame with a hardwood *frame filler (O)*, as shown in Fig. 6.

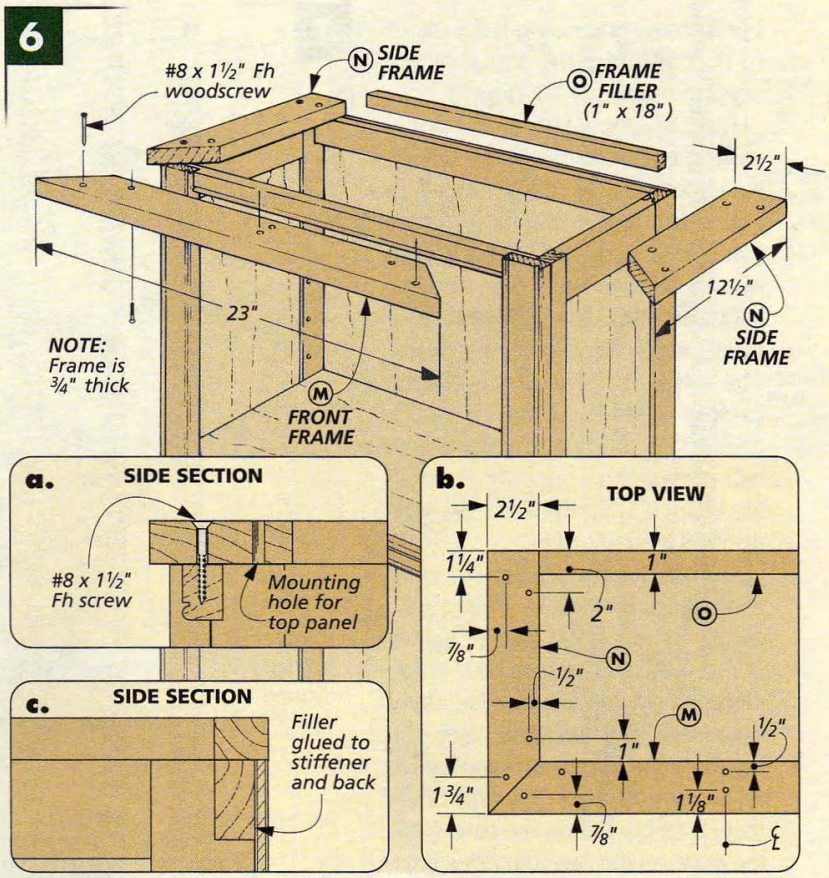

TOP PANEL. With the frame layer complete, I began work on the *top panel (P)* of the case (Fig. 7). Usually, I design the top to overhang the frame a little. But here, I planned to "wrap" the plywood edges with 1"-wide trim (identical to the edging on the dividers). So the ¾" plywood panel is sized to match the outside edges of the frame exactly (Fig. 7a). But before cutting it to final size, I glued a ½"-wide *top trim (Q)* to the panel. (This hardwood strip hides the plywood edge at the back of the case.)

TOP EDGING. As I've already mentioned, the *front edging (R)* and *side edging (S)* that cover the exposed plywood on the top are identical to the divider edging (Fig. 7). They're ½"-thick pieces cut 1" wide and have a bead profile on both edges.

Just like the frame earlier, you'll want to start with the front piece when mitering the edging. And (unlike the edging on the dividers) when it's time to glue this edging in place, you'll be able to use clamps.

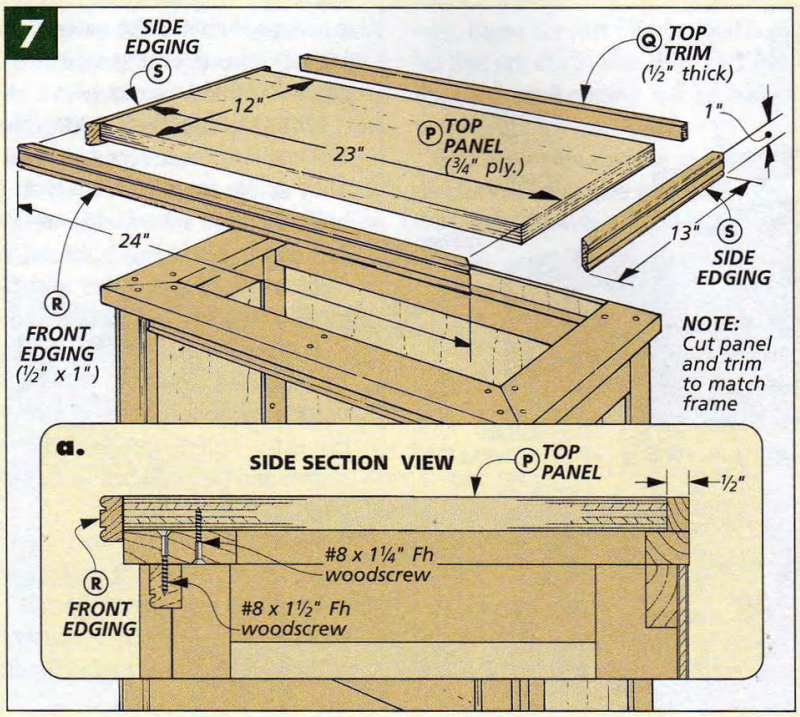

DRAWERS

With the case complete, the last thing to do is build the two small drawers. Whenever I need quick, strong drawers, I use a locking rabbet joint for the front corners (Figs. 8 and 8a). Here a tongue on the front piece "locks" into a dado on the side. (The

back corners are connected with tongues and dadoes, as in Fig. 8b.) Best of all, a locking rabbet can be cut on the table saw in just a few steps, as illustrated in the box below.

CUT TO SIZE. Since the front overlaps the sides, it needs to be cut from thicker stock. So the *drawer fronts (T)* are 3/4" thick, while the *sides (U)* and *backs (V)* are only 1/2" thick. I sized the drawer pieces so they'd fit in the case openings with 1/16" gaps on the sides, top, and bottom. (The gap at the bottom will be created by some nylon glide tape the drawer will ride on.) Also, note that in the front the drawers set back 1/4" from the edging on the dividers (Fig. 8a) and that at the back of the case the drawers stop against the back panel (8b).

When the joinery is cut on all the pieces, you can cut the grooves for the 1/4" plywood *bottoms (W)*. Then the drawers can be glued together.

DRAWER GUIDES. In order for the drawers to open and close smoothly, you still need to add two items to the case. First to keep the drawers opening and closing straight, I added hardwood *drawer guides (X)*. These fit inside the case and are cut so they stand proud of the face stiles 1/16" (Fig. 8a). When you're sure the drawers will open and close smoothly, you can simply glue these guides inside the case.

The other item that helps the drawers open smoothly is nylon glide tape. (It also lifts the drawer, creating the 1/16" gap at the bottom.) This tape is simply placed on the drawer dividers next to the guides.

FINISH. Now that the drawers are complete, you can add some wood knobs and apply a finish to the entire project. I mixed up my own oil-based stain. (I'll give you the "recipe" on page 35.) Then I applied a few coats of a wipe-on finish. W

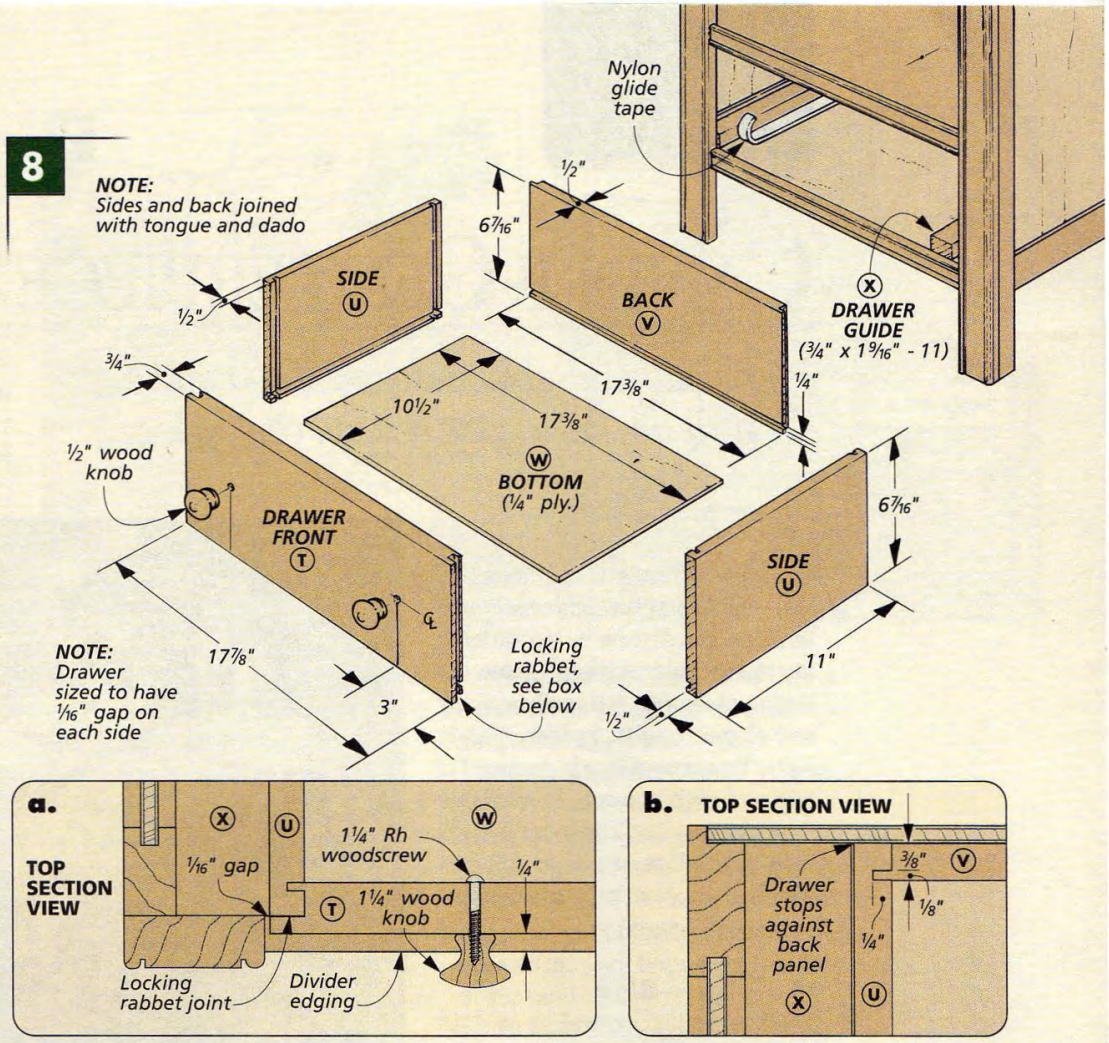

HOW TO MAKE LOCKING RABBETS

For the drawers on this bookcase, I used a locking rabbet joint at the front corners. To cut it, all it takes is three quick setups on the table saw (Figs. 1-3).

The first step is to cut a 3/8"-wide slot on the ends of the drawer fronts (Fig. 1). The important thing is the depth (height) of the slot. It should match the thickness of the drawer sides.

Next, add an auxiliary fence for the dado blade and lay the front piece down. Then trim it along the inside edge to create a 1/4"-long tongue (Fig. 2).

The last step is to cut a dado on the drawer side that will fit over the tongue on the front of the drawer (Fig. 3).

▲ *In a locking rabbet joint, a tongue cut into the end of the drawer front fits into a dado cut in the drawer side.*

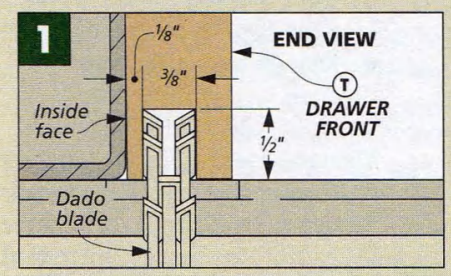

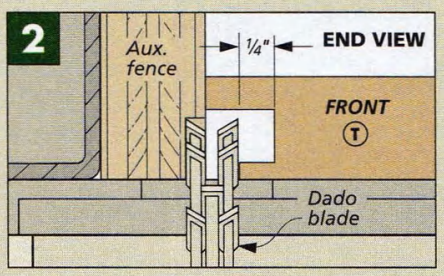

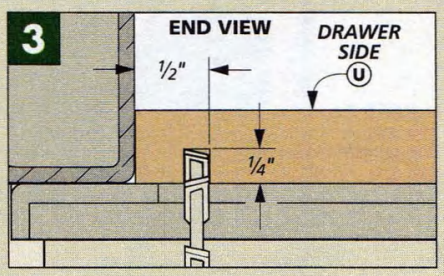

ONE-EVENING PROJECT

CANDLE CENTERPIECE

Highlight your table and your woodworking — with this decorative holiday centerpiece.

X's or O's? That's what I thought of when I first saw this candle centerpiece. But despite its similarity to a certain popular children's game, the design makes an extremely striking and elegant candle holder. (Safety Note: This centerpiece is designed to be used with commonly available "tealight" candles. These candles are held in small plastic or metal cups which make them safe to use in this wood centerpiece.)

BASE

The base of this centerpiece couldn't be much simpler. It's just a square block of wood overlaid with a grid made up of thin wood strips.

I started out by cutting a square *base (A)* out of 3/4"-thick stock (Fig. 1). Then to hold the dividers that will be added later, two pairs of slots are cut into the top surface of the base at right angles.

As you can see in Fig. 2, these slots are cut on a table saw, using a dado blade. All four slots are identical, so you only have to worry about setting up the rip fence on your table saw one time. However, the important thing here is not the distance from each slot to the edge of the base but the distance *between* the slots. The "square" in the center of the base needs to be 2 1/4" square to match the candle cups that will be added later (Fig. 2a).

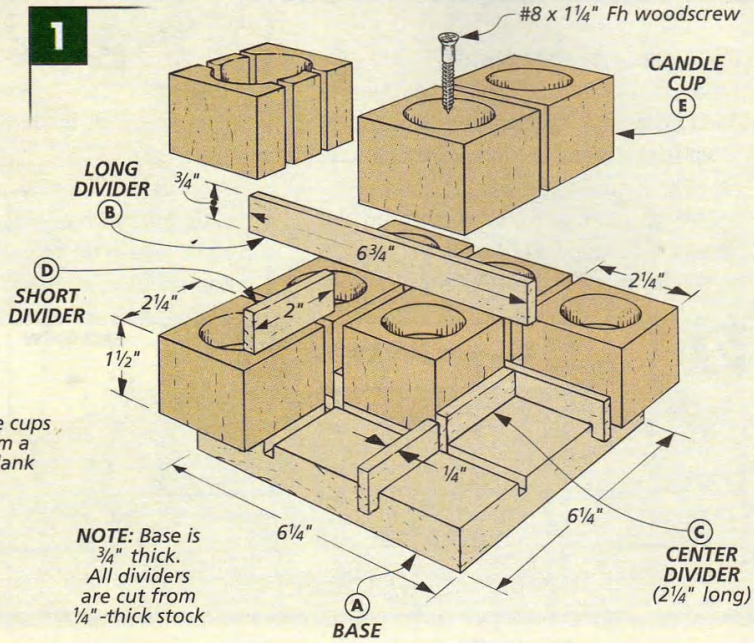

DIVIDERS. The grid that sits on top of the base is made up of eight individual pieces. These are all the same width and thickness, but there are three different lengths (Fig. 1). First, two *long dividers (B)* are glued in place. Then the two *center dividers (C)* are glued in between the long dividers. Finally, the four *short dividers (D)* are glued in place. That's all there is to the base. Now you can start working on the candle cups.

CANDLE CUPS

If you take a look at Fig. 1, you can see that each *candle cup (E)* is actually a glued-up block made out of three layers of 3/4"-thick stock. But instead of gluing up each block individually,

it's much easier and quicker to glue up three long strips and then cut the blocks from this blank.

I cut the strips for my blank about 3" wide. This way, you can glue them up without having to worry whether or not they're exactly aligned. Then after the glue is dry, the blank is squared up to its final dimensions (2¼" square). The next step is cutting the individual blocks from the blank.

CUT TO LENGTH. After deciding on the height you want your candle cups (see box below), you can cut the blocks to length. To ensure that all the blocks end up the same length, try clamping a block of wood to your rip fence and use the block as a stop, as you see in Fig. 3.

DRILL HOLES. Once all nine blocks have been cut, you're ready to drill the holes for the candles. Using a Forstner bit, I drilled a 1⅝"-dia. hole ⅝" deep in the end of each block (Fig. 4a). There's nothing complicated about this, but a couple of tips make the process go a lot smoother.

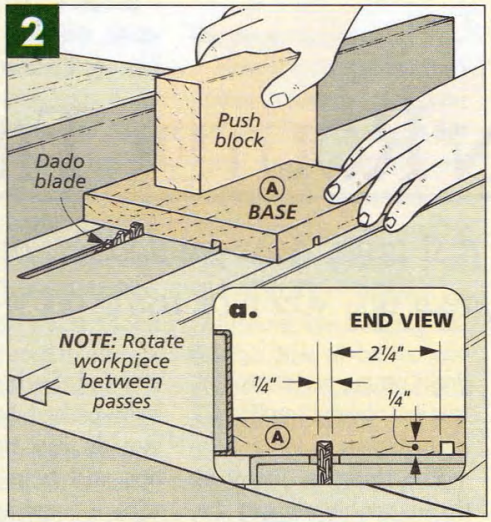

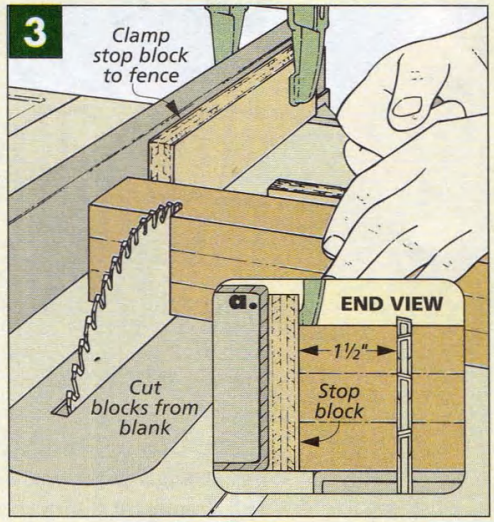

First, to quickly center the hole on each block, I clamped a fence and stop block to the table of my drill press, as you can see in Fig. 4.

Second, because you're drilling a fairly large hole into end grain, you want to minimize the heat caused by friction to avoid burning the wood (and your drill bit). To do this, I set my drill press to its slowest speed.

After drilling the holes for the candles, the next step is to drill a countersunk shank hole in each cup for a mounting screw.

FINISH & ASSEMBLY. Before assembling the cups and base, I applied a finish to all the pieces. Then it's just a matter of screwing the blocks in place (Fig. 5). (To create a uniform appearance, I oriented all the candle cups so the joint lines were running in the same direction.) W

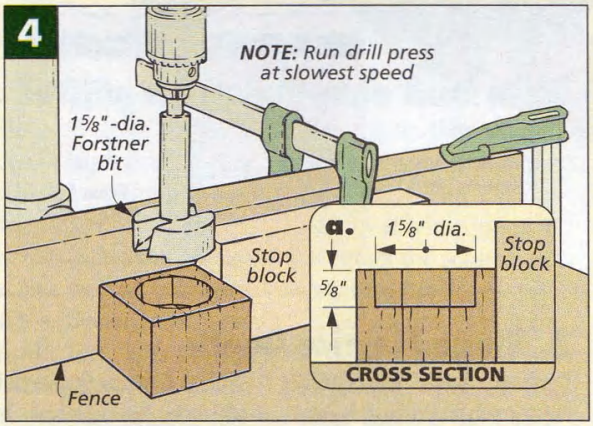

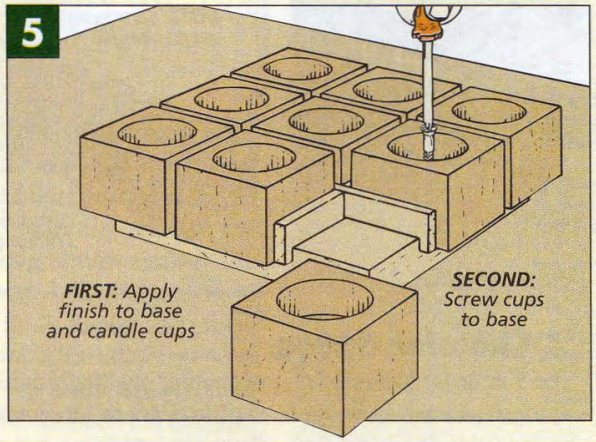

HEIGHT VARIATION

You can create strikingly different effects with this candle centerpiece by cutting the candle cups to different heights. (You might even want to make several extra cups of various heights so you can mix and match them in different combinations.)

For the stair-step design of the centerpiece shown in the photo at the right, I made cups that were 1½", 2", and 2½" high (three of each). Just make sure that you drill all the holes for the candles to the same depth (⅝"). And don't forget that you will need longer screws (1¾" and 2¼") for the taller blocks.

TOP TEN ROUTER TIPS

Perfect setups the first time, dead-on dadoes, avoiding chipout, and more — ten great tips you'll be using on your next project.

I'm sure that at some point every woodworker has routed a pair of dadoes that didn't align perfectly. Or had a router bit chip out the grain on a workpiece that was just about completed. I know I have.

The thing is, many of these problems can be avoided. So here are ten hand-picked tips to help you do just that. These tips will help you work with a hand-held router more quickly and accurately — covering all the bases from setting a bit accurately to creating a profile *without* chipout.

1. Depth Gauge

Setting the depth of a router bit can involve some trial and error. But a quick setup gauge will eliminate all the guesswork so you can set the depth of the bit precisely — the first time, see the photo below.

The gauge is made from a scrap of 2x4 with a series of half holes, as in the drawing below. (I drilled them with a Forstner bit because it will work on the edge of a board.) Once the holes are drilled, I added a round-head brass screw to the "center" of each. (Note: The length of these screws will vary.) Now all that's left is to "dial in" the screws to various heights, measuring *down* to the screw from the top face of the gauge. (I did mine in 1/16" increments.)

With the gauge, setting a bit is simple. Place the router base on top, as in the photo. Then lower the bit until it touches the screw that corresponds to the desired depth. W

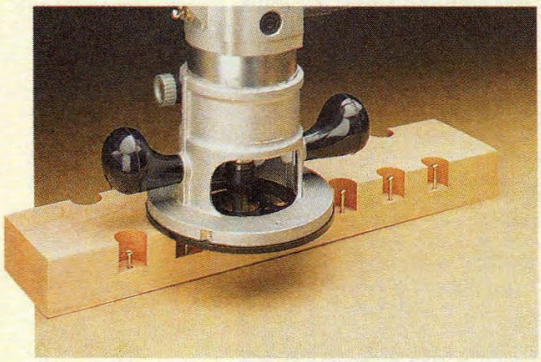

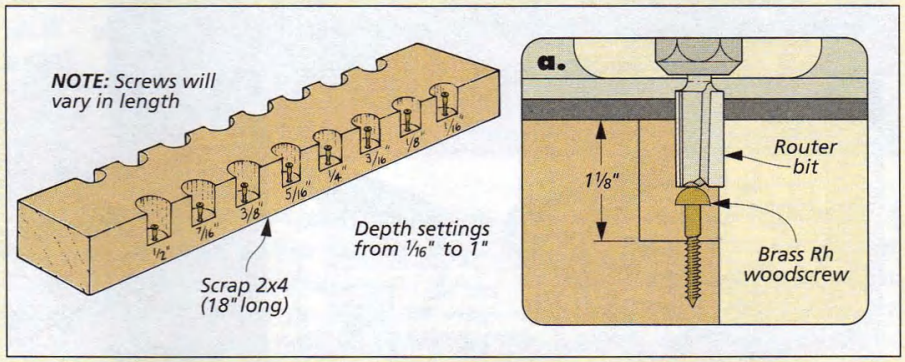

2. Chamfer Gauge

The router bit I use about as much as any other is the chamfer bit. Whether I'm just relieving an edge (with the bit set 1/16" or 1/8" deep) or routing one that's more visible (1/4" or deeper), there's a lot of time spent setting the bit.

Unfortunately, the depth gauge that's shown above won't work for bits with guide bearings. So I created a quick chamfer gauge by routing different sized chamfers around the edge of a scrap block. (Label the sizes for quick reference.) To set the bit, all you have to do is raise it until its cutting edge matches the profile on the gauge, see photo. W

3. Hinge Mortise Depth

I often use a hand-held router when cutting hinge mortises — the straight bit creates a really flat, smooth mortise. However, one of the challenges is setting the bit to match the hinge leaves. But here's an easy way to do this in one shot.

What I do is use a pair of hinges to support the base of the router, as in the drawing below. The bit is lowered until it just touches the work surface. Now the mortises can be routed — and the depth should be right on. W

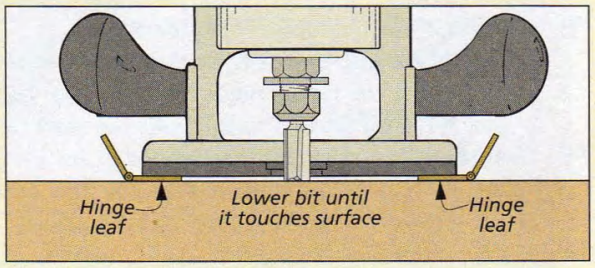

4. Trimming Plywood Edging Flush

When using plywood to build a project, I know there's typically going to be exposed plywood edges that will need to be covered. Applying the strips of hardwood is pretty straightforward, but since I like the edging to be a hair larger than the thickness of the plywood, it has to be trimmed flush after it's been glued in place.

The trick with trimming edging is in *not* damaging the thin veneer on the plywood. And to avoid this, I like to get the job done with a hand-held router and a flush trim bit.

The challenge is "balancing" the router on the edge of the plywood. If the router tips, the bit will gouge the edging. But since there's usually more than one plywood piece that's being edged, there's a really quick solution.

I stand the two panels on edge with 2x4 scraps between them and a handscrew to stabilize them so they won't fall over, as in the photo at right.

Now the router has two points to rest on. (And you can trim both panels at the same time.) Just be sure to rout in a counterclockwise direction so you're not back routing, as shown in Fig. 1 below.

Also, if the bearing on the bit has to cross any grooves or dadoes, I cut small filler strips to plug them temporarily (Fig. 2). This way, the router bit won't "fall" into a dado and gouge the edging. W

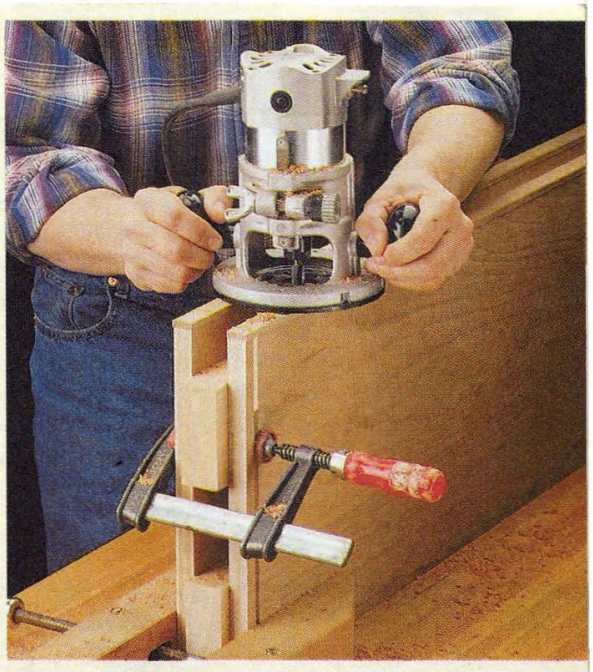

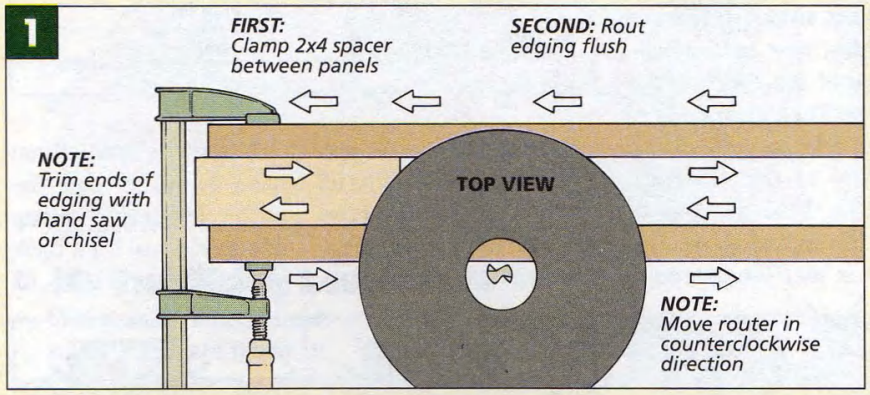

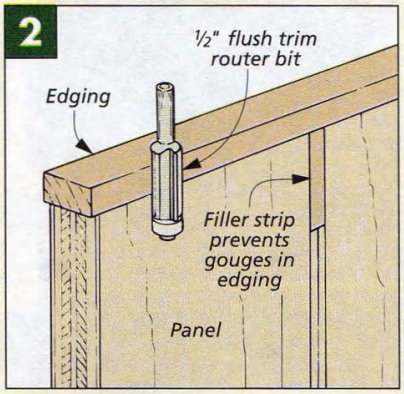

5. Setting a Straightedge Accurately

When routing a dado across a large panel, I generally clamp a straightedge to the panel as a temporary fence to guide the router. But this isn't as easy as it sounds. Because the base (not the bit) rides against the straightedge, you have to "offset" the straightedge from the layout lines. One quick solution for this is to build an alignment gauge.

To make this gauge, clamp a scrap block to the bench, as in Fig. 1. Then clamp a thicker piece at one end of the scrap to act as a temporary fence.

Now, mount the bit for the dado, and rout across the gauge, keeping the router tight to the fence. (Mark the router base so it will always be oriented the same, see box at right.)

To use the gauge, align the dado on the gauge with the layout lines on the workpiece. Then butt the straightedge against the gauge and clamp it down (Fig. 2). Repeat this procedure at the opposite end of the straightedge and then double check the first end again (to make sure it has not shifted). Now you're ready to rout the dado. W

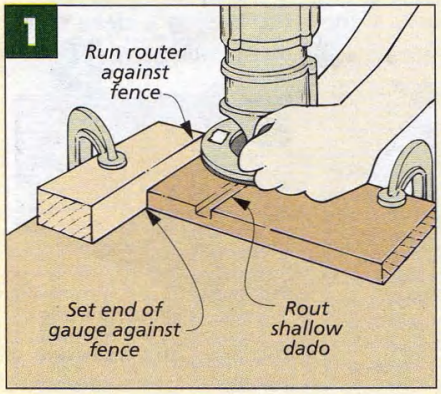

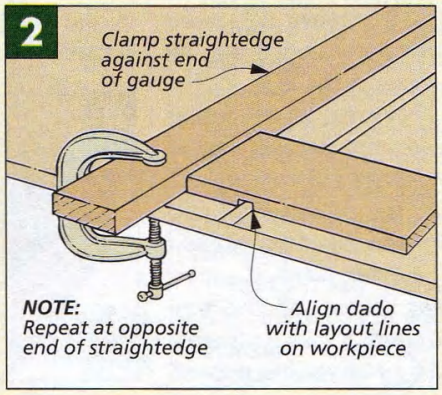

6. BASE POSITION

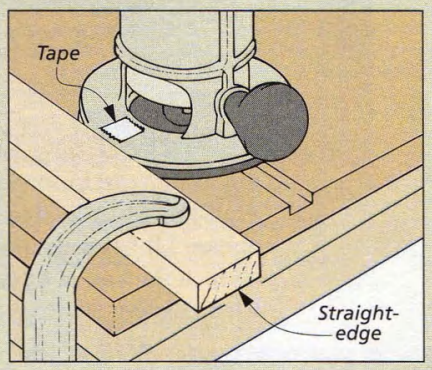

Ever ended up with a dado that was slightly wider than the bit? Or had a small stepped shoulder inside the dado? This happens because the bit isn't centered perfectly in the base of the router — and you've used *both* edges of the base when routing (a different edge for each pass).

To prevent this, all you need to do is work off the same edge of the base when routing against a straightedge. And to remind me which edge I'm using, I mark the base with a piece of tape. W

7. Perfect-Fitting Dadoes

Routing dadoes for plywood is a hassle. Plywood is always slightly less than its nominal thickness. (For instance, 3/4" plywood is really about 23/32"-thick.) So to end up with the proper fit, you have to use a smaller diameter bit and take two passes. But this job gets a lot easier if you have a pair of simple guides, as shown in the photo below.

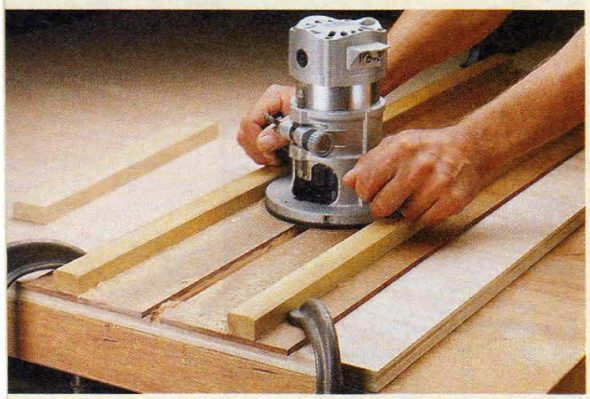

GUIDES. The guides are easy to make. For each one, glue a straight hardwood fence to a 1/4" hardboard base, see Fig. 1. The base is trimmed to width using the router and straight bit you plan to use, see Fig. 1a. Now the base equals the width of the router base from the outside edge to the bit.

Note: I like to mark the base of the router so I can always keep the same edge against the fence. (See the box on page 29.)

GUIDE SETUP. To use the guides, first lay out one edge of the dado on the piece. Then clamp one of the guides along that line.

Now to size the dado exactly, I use a spacer to set the second guide. The key is that the spacer is cut from the same plywood that will fit into the dado later (Fig. 2). (You can also use a scrap piece the same thickness.)

To rout the dado, all you have to do is run the router left-to-right along one guide and then back along the other (Fig. 3).

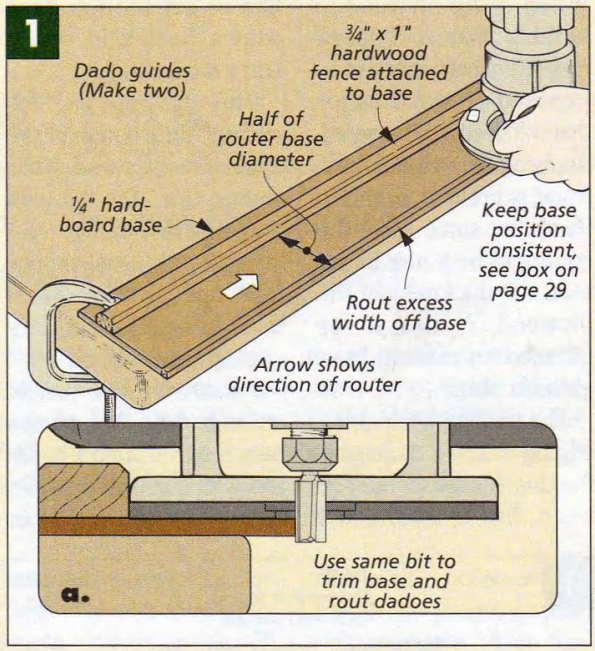

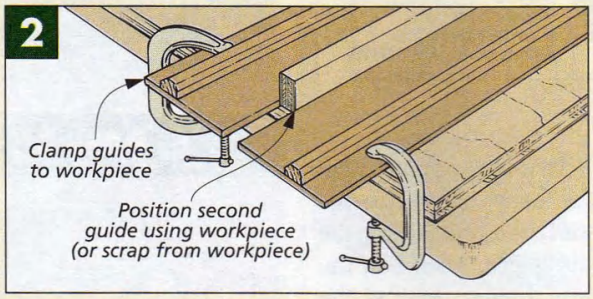

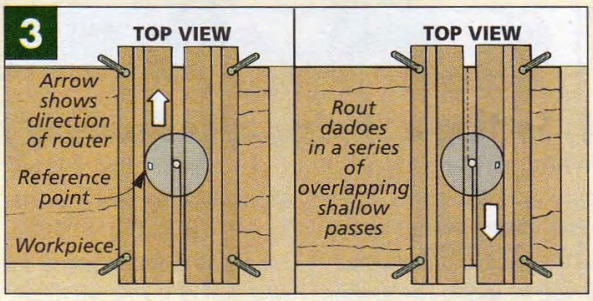

8. Preventing Chipout

One of the most frustrating problems when routing is chipout. It happens most often at the end of a pass when routing across end grain (Fig. 1). As the bit exits the wood, it splinters the fibers on the edge of the piece. That's because there isn't any more wood left to keep these fibers together.

▲ *Adding a scrap block is one way to prevent chipout at the end of the cut.*

ENDS FIRST. One way to get around the chipout problem is to rout the end grain first. You'll still get splintering at the end of a pass (Fig. 1). But as you rout the sides (which are cut along the long grain), you'll remove the areas that are chipped out, as shown in Fig. 2.

However, when routing end grain, you still want to minimize chipout, so *don't* set the bit for a full cut. Instead, take light passes.

SUPPORT SCRAP. If you're *not* routing all the way around a piece, there's still a way you can prevent chipout. All you need to do is temporarily clamp a scrap of wood to the side of the workpiece so it's flush with the end, as shown in the photo at left.

The scrap piece backs up the wood fibers at the corners of the workpiece. So when the end grain is routed, the chipout will end up on the scrap — not on the workpiece.

After the profile has been routed, the scrap can be removed and discarded, leaving a clean edge on the workpiece.

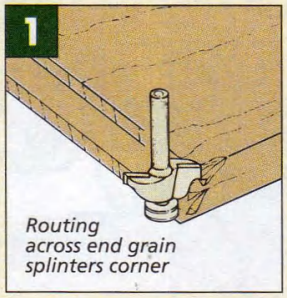

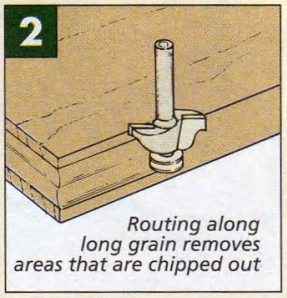

9. Stopping Chamfers

Stopped chamfers routed on the inside and outside of a frame soften the edges and give it a finished look, as you can see in the photo at right. The only trick is getting the chamfers to start and stop in the right places.

A pair of stop blocks clamped to the workpiece will stop the chamfer bit. But there's still a small problem. The point where the bearing guide hits the stop blocks is different from where the bit actually stops cutting. However, a quick modification to the blocks takes care of this.

Start by clamping the stop blocks to each end of a longer scrap piece, as shown in Fig. 1. Now set the chamfer bit to the proper depth and rout the inside corners formed by the stop blocks and the long scrap piece.

At this point, the stop blocks are ready to be used. The first thing to do is mark the start and stop points on the workpiece, as in Fig. 2. Then clamp the stop blocks in place so the routed chamfers line up with the stop marks on the workpiece (Fig. 2a).

Now the chamfers can be routed on the workpiece. Note: This same technique can also be used to rout other stopped molding profiles. W

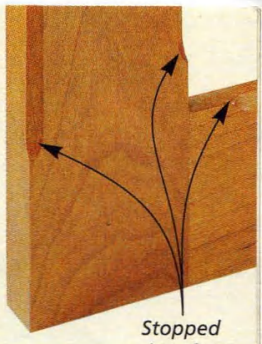

Stopped chamfers

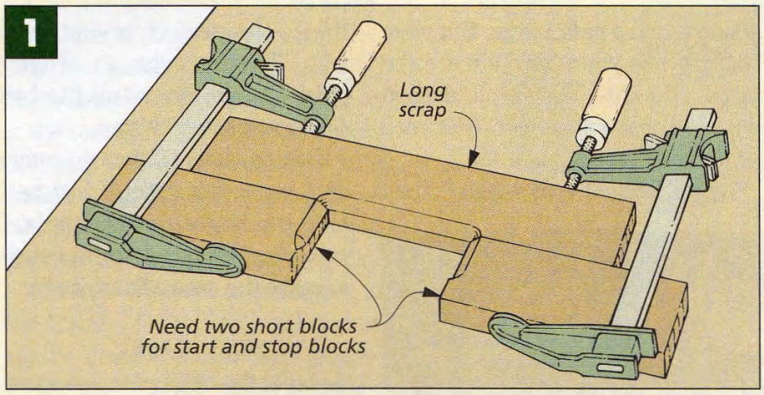

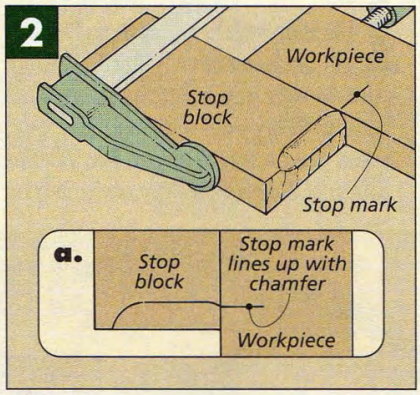

10. Stabilizing Router Cuts

When using a hand-held router, there are plenty of times I'd like some additional support. I don't want the router to tip and ruin the profile (or cut).

SUPPORT BLOCK ON ROUTER. You can stabilize a router cut in a number of ways, depending on the situation. Sometimes, the solution is as simple as fastening a support block directly to the base of the router, as shown in Fig. 1.

To make the support block, cut or plane a piece of scrap stock to match the thickness of the workpiece. Then tape the block to the router base with double-sided carpet tape.

ROUTING ON EDGE. Routing along the edge of a workpiece (as when rabbeting a bookcase or cabinet for a back panel) requires a different solution. Here, you have a couple options.

CLAMP-ON SUPPORT. If the box or case is constructed in such a way that clamps will reach around it, I clamp on a 2x4 block flush with the edge to be routed, as in the photo above right. This provides an extra 1½" of support for the router base.

AUXILIARY BASE. The second method is to add an auxiliary base to the router (Fig. 2). The base serves as a bridge spanning across the case to the opposite side. I make this auxiliary base from a piece of ¼" hardboard.

After drilling a hole in the platform for the bit to come through, I use double-sided carpet tape to stick the auxiliary platform to the plastic base on my router. Then, I rout as usual with the new base spanning across both edges of the case. W

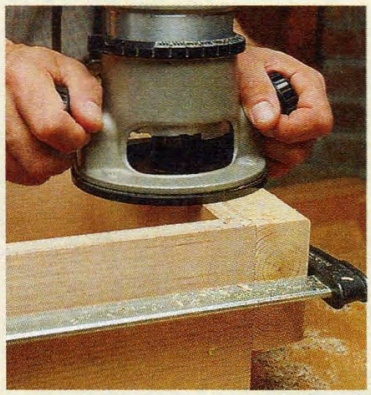

▲ *One method for adding support to a router is to clamp a 2x4 flush with the edge of the case.*

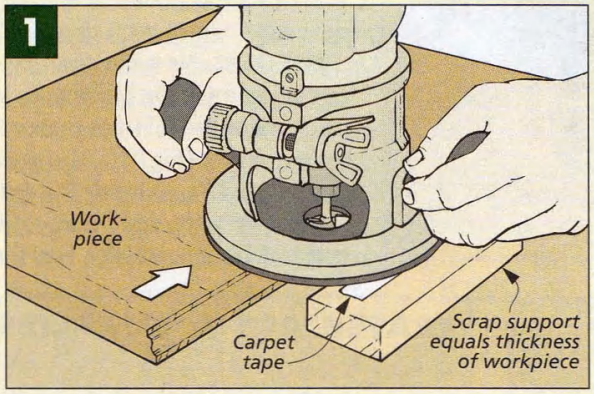

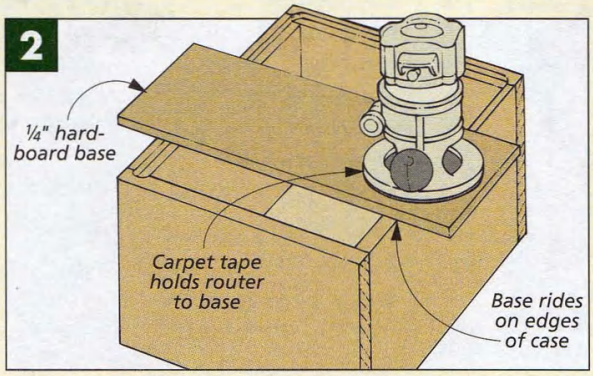

FLIP-LID CARD CASE

An easy-to-build project with veneer and a simple shop-built hinge? Deal me in.

This is one of those projects I love to get my hands on — literally. About the size of a paperback book, you can comfortably hold it in one hand. And with the flick of a finger, the lid flips open and out of the way, swinging on a simple shop-built hinge. But what really grabs your attention are the faces of the case. They're all "decked out" with padauk veneer. (For mail order sources, see page 35.)

Never worked with veneer? Then this is the perfect project to start with. There's even an article on page 14 that covers all the basics (and more) step by step.

Design Note: Of the two common card sizes, this case is designed to hold the larger (poker) cards. But you can easily adjust the dimensions to make the case a little smaller.

CASE

To build the basic case, I worked on the 1/4" plywood *face panels (A)* first. You can go ahead and cut them to finished size, as indicated in Fig. 1 on the next page. But the veneer you glue to both faces of each panel should be slightly oversized. (I worked on one face of each panel at a time.) Then when trimming the veneer, I simply put a new blade in my utility knife to get a clean cut.

CASE FRAME. Now the face panels can be set aside for a minute so you can work on the 1/4"-thick mahogany frame pieces (Fig. 1). The *frame top/bottom (B)*, and *ends (C)* are all ripped 1 1/4"-wide, and because their ends will be mitered later, I cut them

The striking padauk veneer on this case is really easy to apply. So if you've never worked with veneer, this is a great project to try your hand at it. All you need are a few small pieces of veneer and some contact cement. For more on this, refer to the article on page 14.

MATERIALS & SUPPLIES

A	Face Panels (2)*	1/4 ply. - 3 15/16 x 5 15/16
B	Frame Top/Btm. (2)**	1/4 x 1 1/4 - 6 1/4
C	Frame Ends (2)	1/4 x 1 1/4 - 4 1/4
D	Lid Blocks (2)	3/8 x 3/8 - 1
E	Strike Spacer (3)	1/4 x 1/2 - 3/4
F	Box Divider (1)	1/2 x 3/4 - 3 1/4

*Both faces of panels are veneered
**All pieces (except panels) start out oversized

- (1) 1/4" x 1/4" Rod Magnet
- (1) 3/8" Steel Washer (Countersunk)
- (1) #4 x 1/2" Fh Woodscrew
- (1) 3/32"-dia. Brass Rod (1 1/4" Long)

a little long to begin with (1" or so). This way, after cutting a couple grooves on these frame pieces, you'll be able to easily and accurately miter them to length.

GROOVES. I started by cutting two grooves in each frame piece to hold the face panels (Fig. 2). To end up with clean, flat grooves, I used the router table and a 1/8"-dia. straight bit. And since the pieces are rather small, I clamped a zero-clearance top to the table and used an auxiliary fence to cover the opening.

When setting the fence, the important thing is that the distance to the *outside* edge of the bit equals the thickness of the veneered face panels (Fig. 2a). Otherwise these pieces won't be perfectly flush when the case is assembled later on.

TONGUES. With the grooves cut in the frame blanks, mating tongues can be created on the face panels. To do this, a small rabbet is routed around the edges (Fig. 3). Since this joint is going to be visible when the case is cut apart, the tongues should fit without any gaps (Fig. 1a).

At this point, the frame pieces are ready to be mitered to fit around the faces. Since these pieces are so small, I cut them by hand, using a special shop-made miter box, as shown in the margin photo at right. (For more on this miter box and how to build it, refer to page 19.)

ASSEMBLY. Now the case can be assembled. There's nothing tricky here, though you do want to avoid using too much glue. You don't want to end up with a mess to clean up inside the case when it's cut apart.

After the glue has dried, the lid can be cut off, as in Fig. 4. This needs to be a really clean cut, so I used a zero-clearance insert and made sure the saw blade was sharp.

With the lid and box cut apart, there are a few roundovers to add to the corners of the case (Fig. 5). The outside corners get a 1/4"-radius roundover, while those on the edges between the lid and box are only 1/8". To create these roundovers, I laid out the radius across each corner and sanded to the lines.

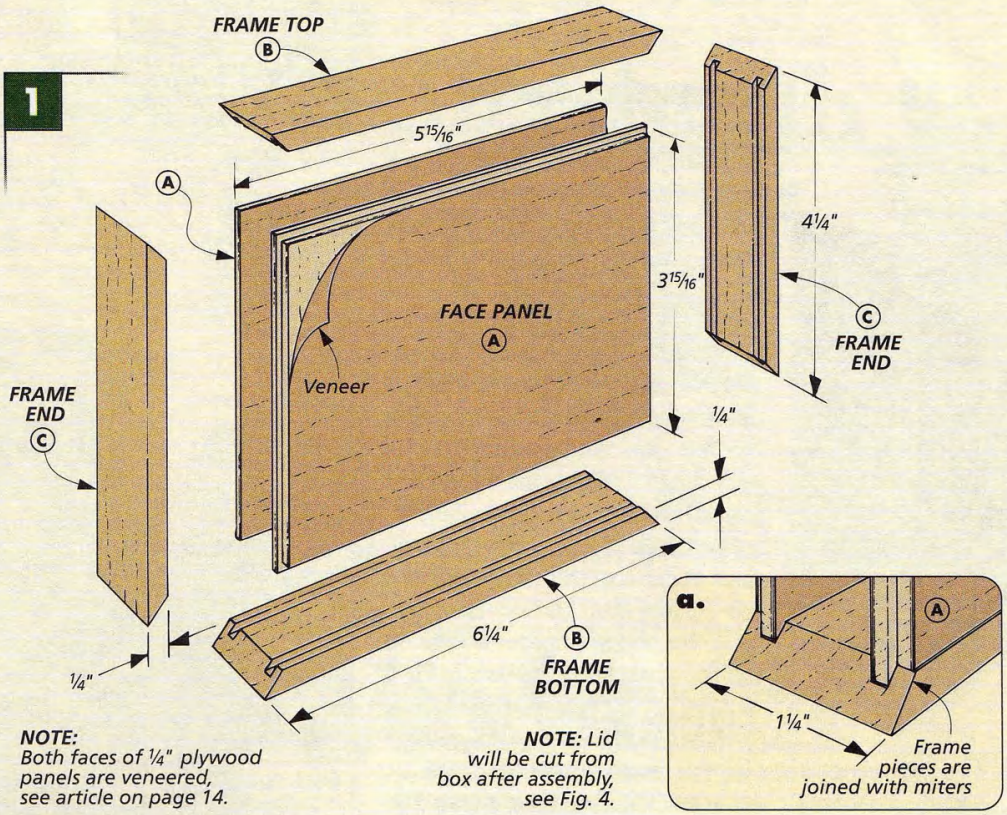

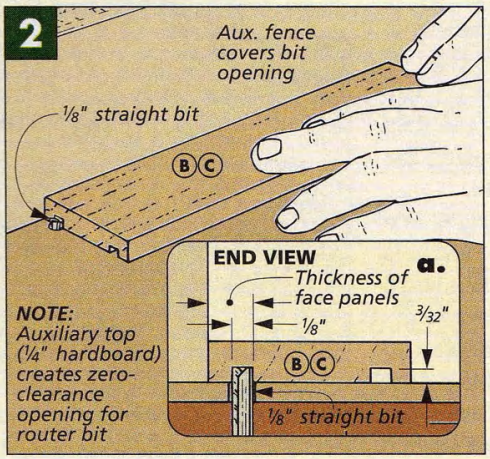

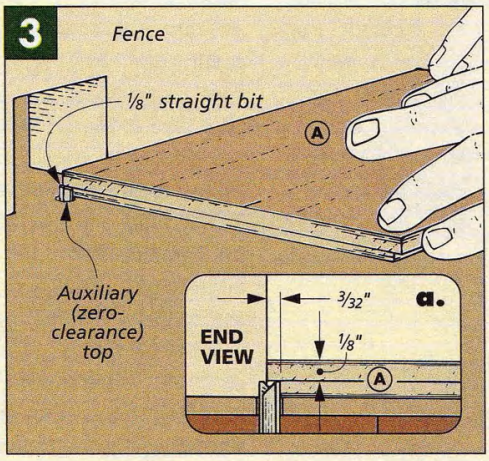

▲ *The small pieces on this project can be cut safely and accurately with a special miter box, refer to page 19.*

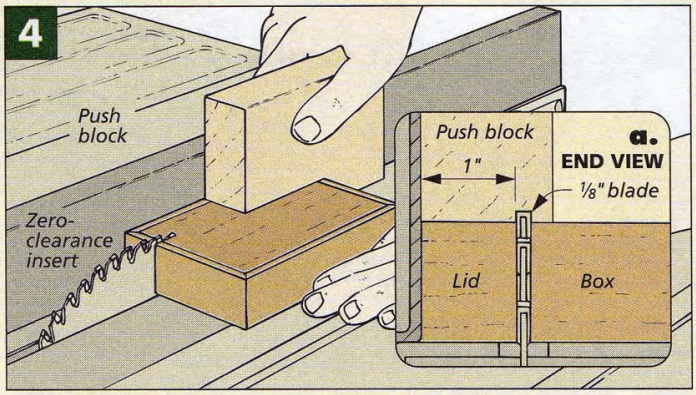

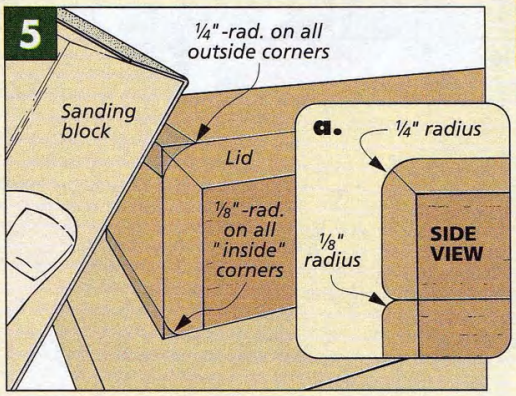

▲ *For a nice contrast with the mahogany frame, I made the two lid blocks from padauk (to match the veneer). One block acts as a hinge. The other keeps the lid and box aligned.*

Connecting the Lid

Now that the lid and box have been cut apart, it's time to put them back together (Fig. 6). But there's more to this than just adding a hinge. You want these long narrow pieces to stay aligned. And there has to be some way to keep the lid closed.

LID BLOCKS. The first thing I did was add two small blocks to the lid (Fig. 6). One lid block will be pinned to the box (and act as a hinge). The other block will keep the lid and box aligned (and act as a finger pull).

For these blocks to work, you'll need to cut centered notches in the box and the lid (Fig. 7). (The notches in the box are deeper so the lid will open past 90°, as shown in Figs. 7a and 7b.) To center these notches, I cut them with a 1/4" dado blade, flipping the pieces between passes.

LID BLOCKS. To safely make the short *lid blocks (D)*, I started with a 4" long blank. (I used padauk to match the veneer.) Sand a 1/8" roundover on what will be the outside face of the lid blocks and then cut one from each end, using the miter box (refer to page 19).

The blocks are simply glued into the notches in the lid. And to help align them initially, I used a small square block (Fig. 8).

STRIKE FOR MAGNET. The last piece to add to the lid is a strike plate for the magnetic catch (Fig. 9). This is just a screw, a countersunk steel washer, and a *strike spacer (E)*. The spacer's cut from an oversize blank and then glued into the center of the lid.

Now the lid can be hinged to the box with a tiny brass rod (Fig. 6). I clamped the lid and box together and drilled a pilot hole through them. (To keep the small bit from wandering, I drilled from both faces.) Cut the rod slightly long and sand it flush after it's been glued in place with epoxy.

DIVIDER & MAGNET. All that's left is to add a *box divider (F)* and rare-earth rod magnet. (For sources, see page 35.) The divider creates two compartments for the cards, and I rounded its top edges before adding the magnet (Fig. 6b). (To hold the divider safely while drilling the hole, I clamped it in a handscrew.)

TESTING THE FIT. After the magnet is glued into the divider, I set it in the case and shut the lid. If the divider's too long, simply trim its bottom end until the lid shuts completely. Then glue it in the case, using a square to make sure it's straight (Fig. 10).

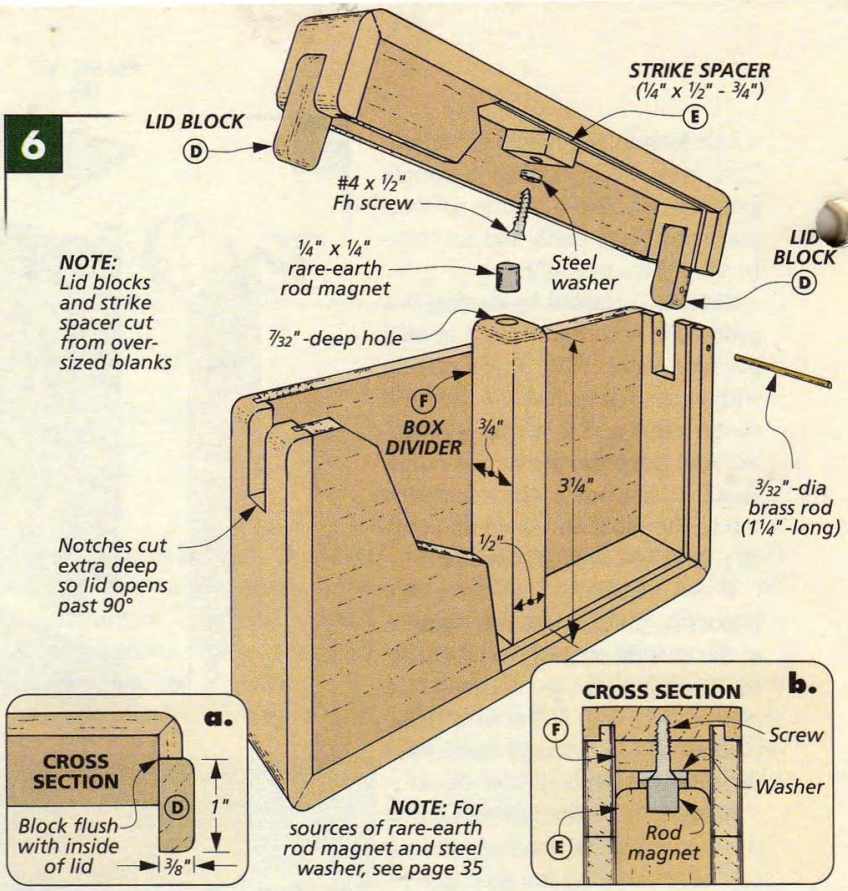

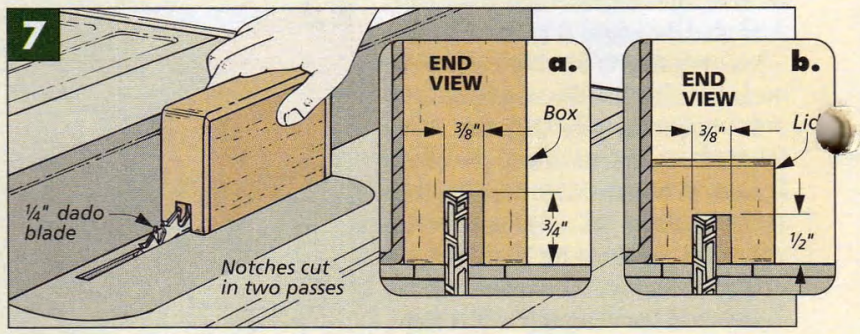

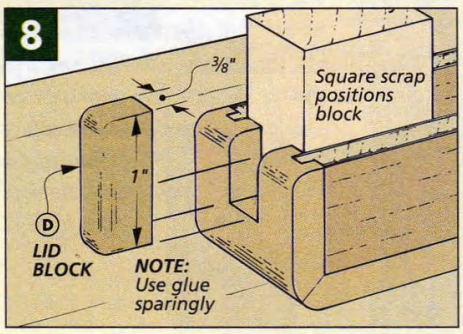

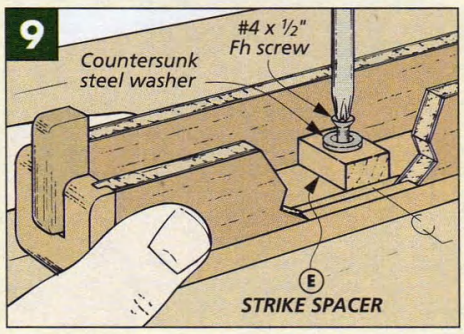

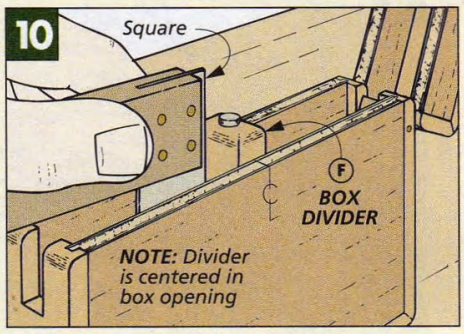

SOURCES

The hardware and supplies you need to build the projects in this issue are available from local stores or the mail order sources at right. For a complete list of supplies needed for each project, check out the detailed list included in each article.

CHESSBOARD

The chessboard on page 6 requires just a few hardware items, and most of these should be available locally. (Veneering tools and supplies are available from the sources at right.) However, if you have trouble finding the brass knobs and bullet catches, there are several sources listed. (Note that the 1/2" brass knobs may not be *identical* to the ones we used.)

The bullet catches also required shop-built catch plates. For those, I went to a local hobby shop and bought a small strip of .032"-thick brass.

CHESS & CHECKER PIECES. Besides the hardware, you'll also need chess and checker pieces. For the chess pieces, the important thing is the diameter of the base. The drawer was built to hold 1 5/8"-dia. (and smaller) pieces. To find a set, you might first try a local game shop, but there are also a couple sources listed at right.

BOOKCASE

There's not much hardware needed for the bookcase on page 20. Besides woodscrews and nails, you'll need some 1 1/4"-dia. wood knobs, spoon-style shelf support pins, and nylon glide tape, see sources list at right.

BEAD PROFILE BIT. In addition to the hardware, you'll also need a bead profile bit. The bit I chose routs a 1/4"-dia. bead profile (also listed as a *1/8"-radius* bead profile). It's available from a number of sources, see list at right.

BOOKCASE STAIN. When finishing the bookcase, I mixed up my own stain to give the red oak an aged appearance.

This is a lot easier than it sounds. You just need a tube of artist's oil and a quart of boiled linseed oil. I mixed three tablespoons of burnt umber artist's oil into the quart of boiled linseed oil. Both of these items are thick, so it'll take a lot of stirring to get them mixed well. And the mixture you end up will also be thick, but it's easy to apply. Its thickness also means the color will be uniform. The stain won't soak in too quickly and leave the wood with a blotchy appearance.

Burnt umber artist's oil can be purchased from art supply stores, and boiled linseed oil is available at hardware and paint stores.

CANDLE CENTERPIECE

The candle centerpiece doesn't require any hardware worth mentioning. (You can find the "tealight" candles at just about any department store that sells items for the home.) But you will need a fairly large Forstner bit (1 5/8"-dia.), see the list at right.

CARD CASE

To build the card case, you'll need some small pieces of veneer. (I used padauk.) And you'll also need some small wood blanks of the same species (for the lid blocks).

You'll also need a short length of brass rod, and a rare-earth rod magnet with a steel washer. I found the brass rod at a hobby shop. The magnet and washer I purchased from *Lee Valley*.

LIST RENTAL STATEMENT. On occasion, we allow companies whose products and services may be of interest to you to send advertising mail to our subscribers. We are careful to choose ethical companies that have information of genuine interest to our subscribers, and most of our subscribers appreciate receiving these materials. However, if you prefer to have your name deleted from this mailing list made available to other companies, please write to us at *Woodsmith*, 2200 Grand Avenue, Des Moines, IA 50312. W

ASSOCIATE EDITOR

We're currently looking for an enthusiastic woodworker to join our editorial team. If you're interested, send a cover letter and resume to S. Ribbey, 2200 Grand Ave., Des Moines, IA 50312. Or email it to: sribbey@augusthome.com

MAIL ORDER SOURCES

Similar project supplies and hardware may be ordered from the following companies:

The Chess Shoppe
877-327-8356
www.Nf3.com

Constantine's
800-871-8158
www.constantines.com
Chessboard hardware, Chessboard veneers, Card case veneers, Veneering tools & supplies

Lee Valley
800-871-8158
www.leevalley.com
Chessboard hardware, Bookcase hardware, Veneering tools & supplies, Bead bits, Forstner bits, Rare-earth magnets

Rockler Woodworking
800-279-4441
www.rockler.com
Chessboard hardware, Bookcase hardware, Veneering tools & supplies, Bead bits

U.S. Chess Federation
800-388-5464
www.uschess.org

Woodcraft
800-225-1153
www.woodcraft.com
Chessboard hardware, Forstner bits

Woodworker's Supply
800-645-9292
Chessboard hardware, Chessboard veneer & inlay, Veneering tools & supplies, Bead bits, Forstner bits

WOODSMITH PROJECT SUPPLIES

To order a hardware kit from *Woodsmith Project Supplies*, please use our Toll Free order line, see below. It's open Monday through Friday, from 8 AM to 5 PM Central Time. Before calling, please have your VISA, MasterCard, or Discover Card ready.

If you want to mail in your order, call the number below for more information concerning shipping charges as well as any applicable sales tax.

1-800-444-7527
When ordering, please use Key W132

Note: Prices subject to change after February 2001.

Woodsmith *on the web*

- Over 100 Woodworking Tips Online
- Visit Our Readers' Project Photo Gallery
- Project Plans You Can Download
- Catalog of Project Kits, Tools, Jigs & Plans
- Forums for Woodworking, Tools & Classifieds
- Links to Other Woodworking Sites
- Order *Woodsmith/ShopNotes* Back Issues

www.woodsmith.com

New Online Customer Service
Click on Subscriber Services at
www.woodsmith.com

- Access your account status
- Find out if your payment has been received
- Change your mailing or email address
- Tell us if you've missed an issue

A LAST LOOK

FINAL DETAILS

▲ **Candle Centerpiece.** *Build this project in one evening and light up the holidays for years to come. You won't need much in the way of time or materials. Complete plans for this simple gift project begin on page 26.*

▲ **Bead-Front Bookcase.** *Small details make a big difference. A bead profile, two easy-to-build drawers, and frame and panel construction — they all add up to a project perfect for the bedroom, bathroom, den or kitchen. Instructions start on page 20.*

► **Chessboard & Card Case.** *The only thing better than receiving one of these beautiful projects as a gift is building it. Both the chessboard (page 6) and card case (page 32) give you an opportunity to do some simple veneering.*